DAEnetIP3

User Manual
Date: 13.08.2018

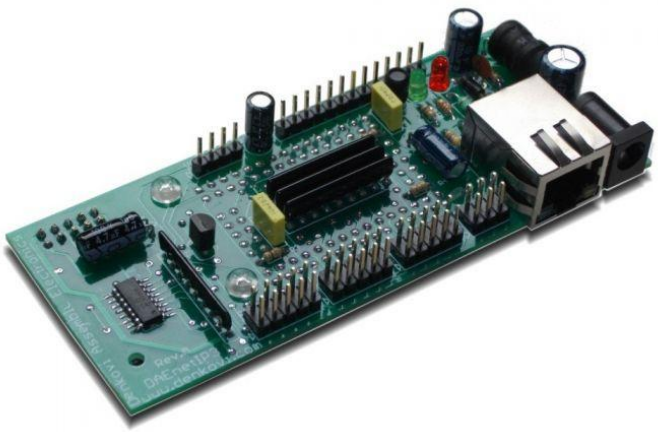

Describes DAEnetIP3 firmware version 2.0.0

Content

1. Basic features

DAEnetIP3 is multifunctional standalone Ethernet / Wireless device for remote management and control with Virtual Serial Port, TCP/IP socket based protocol, HTTP API, Web, Telnet and serial commands access. Many controllers can be connected over LAN/WLAN/WAN or serial network. It can work standalone (without PC). Several such controllers can work together (in distributed WAN/WLAN network) and inputs of one controller can control outputs of another one. It can be used in combination with relay boards and input/output boards – some of them may be found on http://www.denkovi.com/

- 10/100 Mbit Ethernet interface with Link Led. Auto MDIX;
- Wireless Wi-Fi 802.11 b/g interface supporting WEP64, WEP128, WPA/TKIP - Personal and WPA2/AES - Personal (Hot-spot is not supported)
- UART interface for RS232/RS485 serial connection with other such controllers. UART can be used also for configuration of the parameters;
- Power supply: 7.5VDC...25VDC;
- Consumption 90 mA (170 mA with Wi-Fi interface) on 12 VDC;
- Consumption 70 mA (120 mA with Wi-Fi interface) on 24 VDC;
- 1 x 16 digital outputs (0 – 3.3V);
- 1 x 8 digital inputs (0 – 3.3V);
- 1 x 8 analog inputs. Referent voltage: 2.048 V, resolution: 10 bits;
- On boot the outputs are set with states before reset;
- Built in RTC (Real Time Clock). It can be synchronized via NTP manually or automatically each 6 hours;
- Capacitor power backup keeps time for days during power failure;
- Virtual Serial Port - it may be accessed with Serial RS232 commands over TCP/IP network;
- Integrated WEB server with authorization and features like Ajax parameters reading;
- Telnet commands;
- HTTP API commands;
- TCP/IP ASCII protocol with optional RC4 encryption;
- All the network ports can be defined by the user;
- Supports ICMP (ping);
- 19 modes for I/O lines such as inverting, timer, pulses, setting output via input and switch ON/OFF according particular time (scheduling);
- Any input may be referred to control any output of this or another controller in the TCP/IP network;
- Linearization for the analog inputs;
- Box-to-Box (distributed) mode;
- SMTP with authentication (SSL is not supported);
- E-mail notifications for various events;
- IP address protection;
- Power and status led;
- Size: 108mm x 45mm x 24mm;
- Working temperature range: -20 to +70 °C;

2. DAEnetIP3 PCB

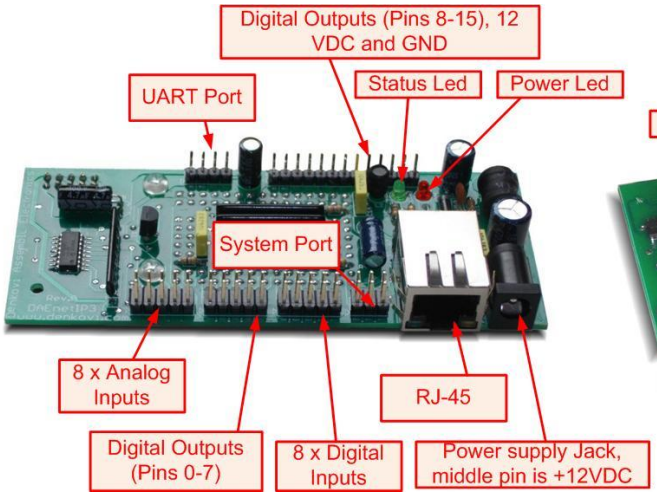

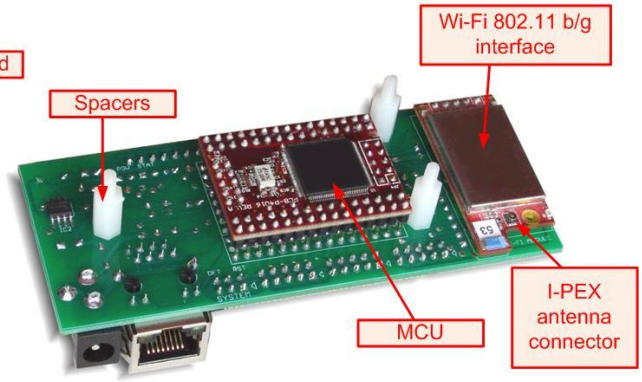

3. Technical parameters

Table 1. Technical parameters

Parameter	Value
Digital outputs count	16
Analog inputs count	8 (10bit ADC, Vref=2.048V) with 100 kOhm pull-down resistor to GND
Digital inputs count	8
Default settings jumper	Yes
LED (Link, Status, Power On)	Yes
Save digital output states	Yes
Digital configurable ADC filter	Yes
Network parameters	IP/Mask/Default gateway
IP lock (protection)	Yes
Telnet for configuration	Yes
Virtual Serial Port (VSP)	Yes
TCP/IP socket based protocol for direct configuration over LAN, WLAN, WAN	Yes
Web server for configuration/access	Yes
Configuration over Serial port (UART)	Yes
Enable/disable Telnet	Yes
Enable/disable RC4 (password protection)	Yes
Size	108mm x 45mm x 24mm
Power supply voltage	7.5VDC to 25VDC
CPU power supply (output level 3.3VDC)	3.3VDC

4. Application examples

DAEnetIP3 has 16 digital outputs that are suitable for controlling electrical devices over the local network or Internet. Using its Wi-Fi 802.11 communication module it is possible to control different electrical devices wireless.

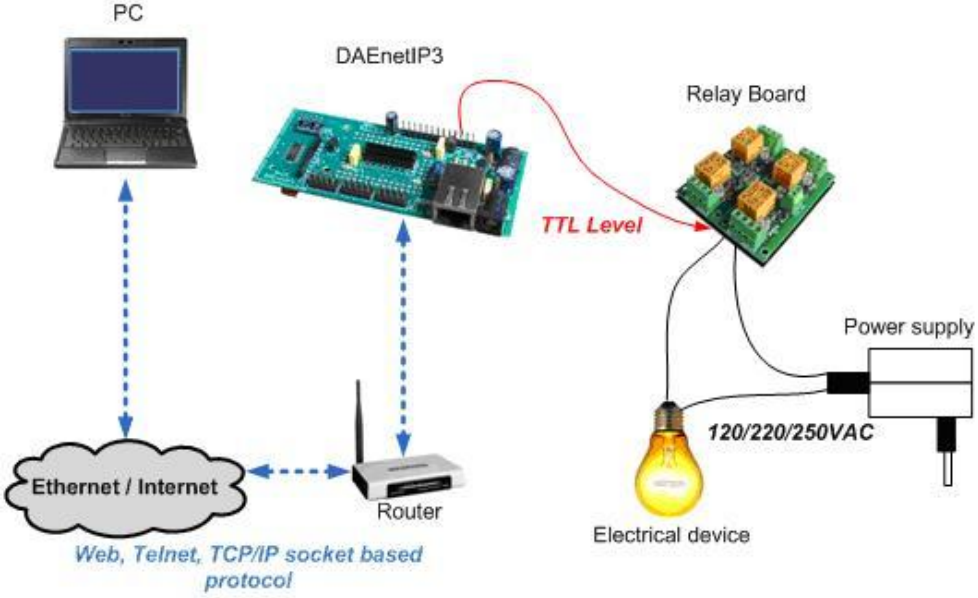

Figure 1. Controlling electrical devices with DAEnetIP3 remotely

DAEnetIP3 has 8 analog inputs (Vref=2.048V / 10bit resolution) and 8 digital inputs (0 – 3.3V). Each sensor producing signal compatible with these inputs levels is suitable. Once, the information (over LAN, WLAN or WAN) from sensors is gathered, it may be received from PC (server) and saved for processing.

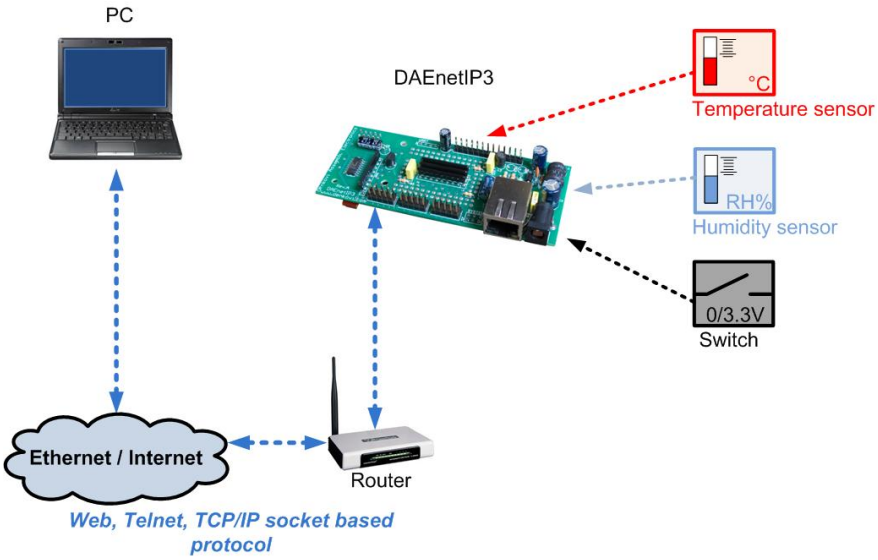

Figure 2. Tracking sensors

DAEnetIP3 can operate as simple alarm. When some input change its state (or cross some threshold – for analog inputs), particular output changes its state also.

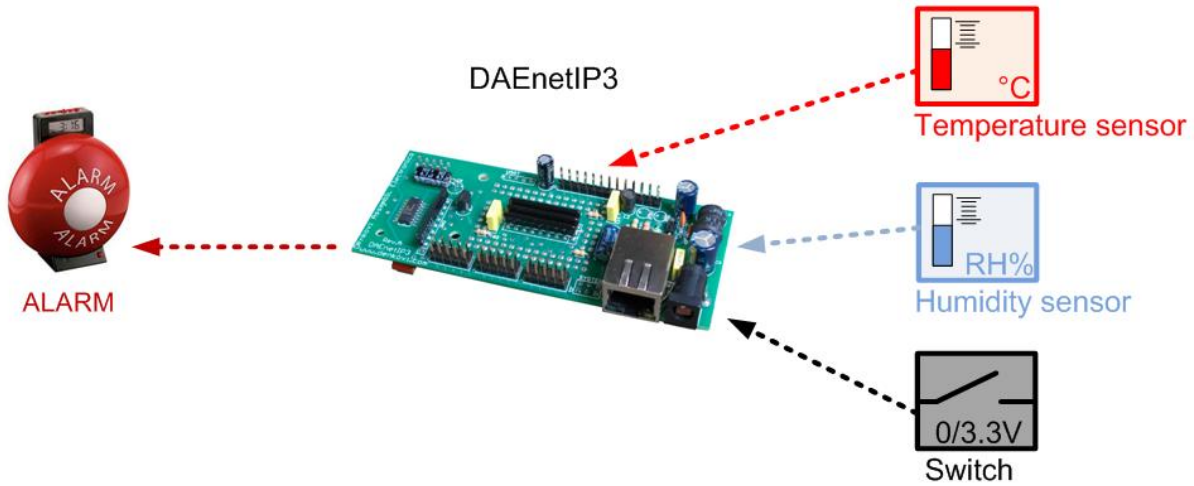

Figure 3. Alarm with DAEnetIP3

DAEnetIP3 gives possibilities to built up to 8 thermostats, using all the 8 analog inputs and 8 of the digital outputs. The flexibility of DAEnetIP3 allows to attach each analog input to each digital output. The combination of different I/O modes makes several variations for the thermostat. Each thermostat can be tracked/configured easily via web browser. The whole process of course may be tracked/adjusted also via Telnet, TCP/IP socket and UART.

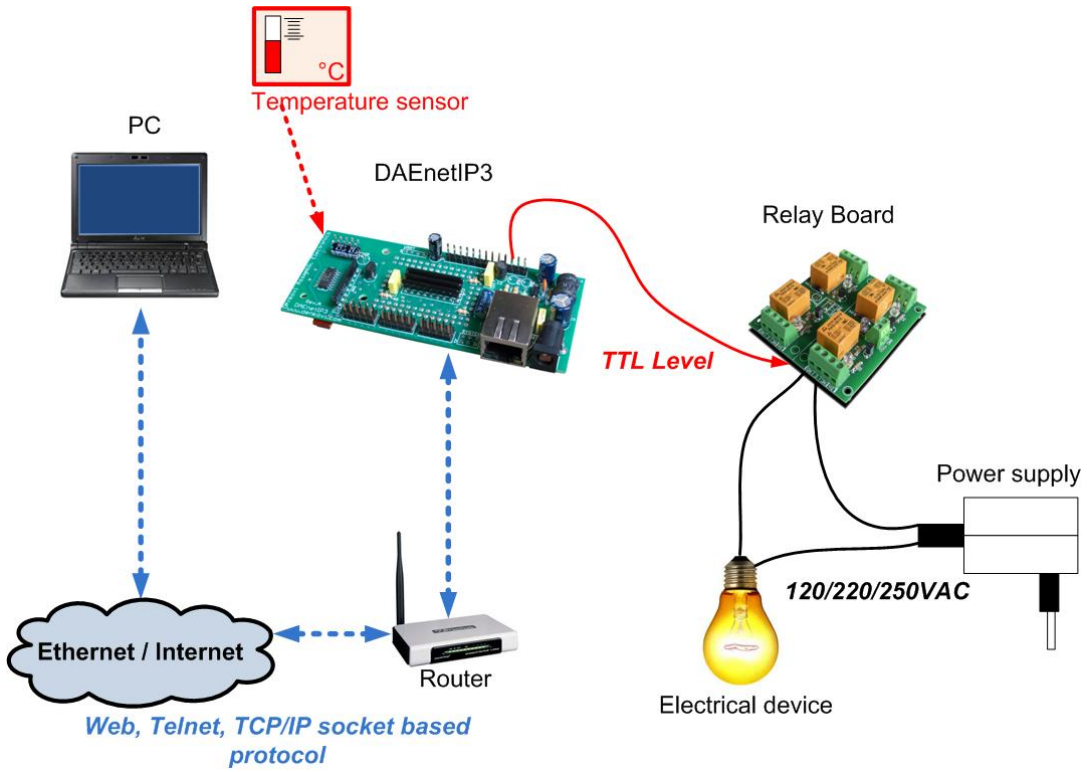

Figure 4. Web based thermostat based on DAEnetIP3, temperature sensor and relay board

DAEnetIP3 allows to set the 16 digital outputs according some event. The mode of each digital input determines how it will react when this event appears. The event may be some time, slope of digital input or crossing some threshold for analog input.

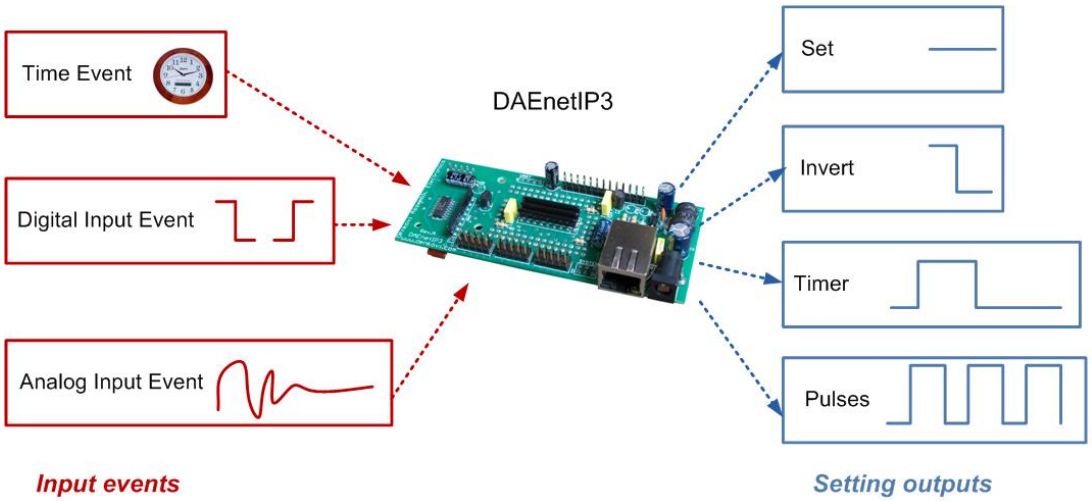

Figure 5. Simple PLC

DAEnetIP3 has UART port (RX,TX and Direction pin) allowing to create RS485 network. DAEnetIP3 acts like a bridge between the two types of networks. This is suitable in cases where single IP address must access many DAEnetIP3 controllers.

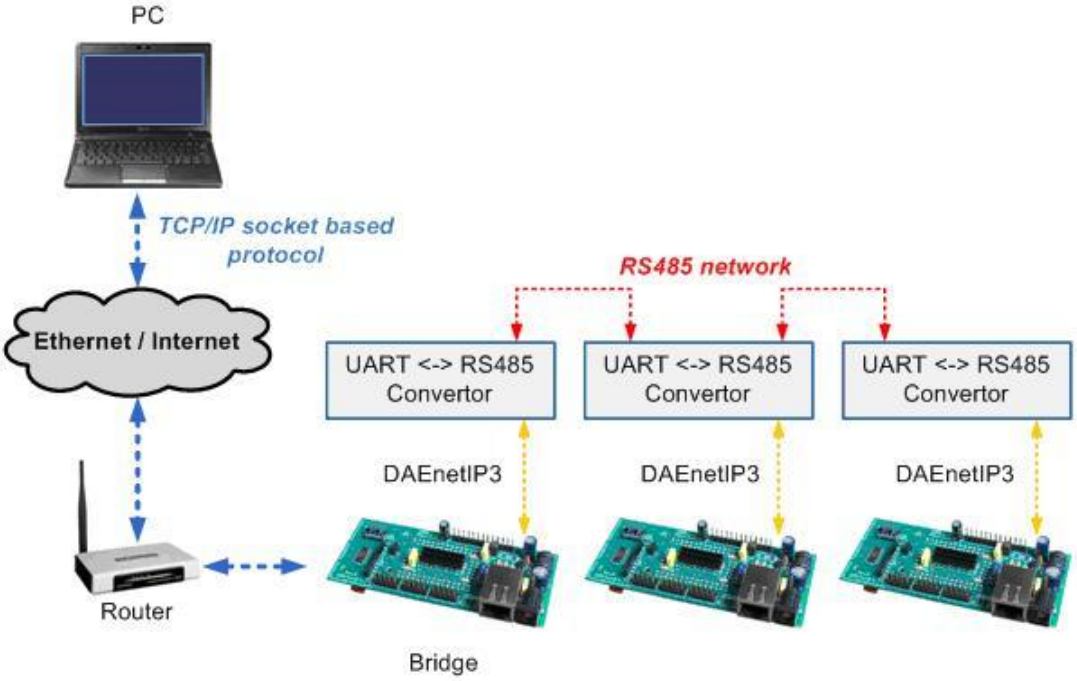

Figure 6. Access RS485 network of many DAEnetIP3s over local network/Internet/Wireless

In many cases the inputs and outputs are not located at the same place. With DAEnetIP3 this is not a problem, because each controller may send message to another one, saying “turn digital output 1 in logical one”. Each DAEnetIP3 may be controller by up to 5 another DAEnetIP3 controllers at the same time. The communication is done over the LAN/ WLAN. Once the network is configured, there is no need of PC. This is also called Box-To-Box mode.

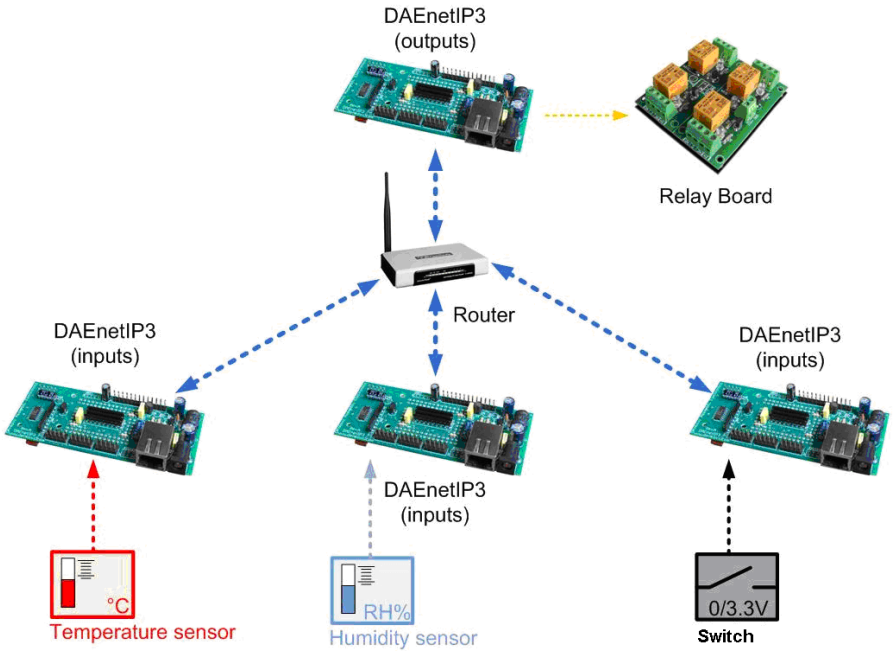

Figure 7. Distributed (Box-To-Box) mode

DAEnetIP3 is device which can be integrated into another device (embedding). For example it can be used in combination with different add-on peripheral modules with relays, analog inputs, digital inputs. The combination for example shown on figure 8 is DAE-PB-RO12/DI8/AI8 + DAEnetIP3, that may be found on http://www.denkovi.com/

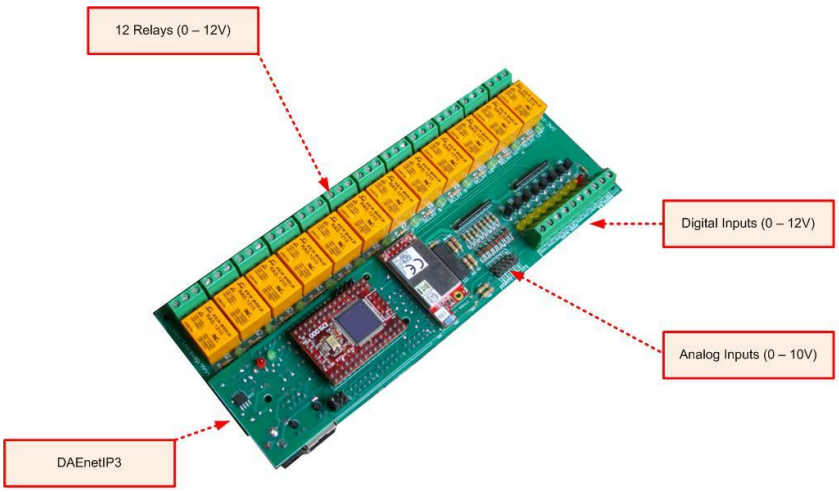

Figure 8. I/O module and DAEnetIP3

5. Default Settings

These are the default (factory) settings of DAEnetIP3. When you buy the controller you will receive it with these settings.

5.1. Digital outputs (Port A)

Table 2. Port A default settings

Parameter	Value
Output state	Low (0V)
Mode	0 (On/Off setting)
ON	1
OFF	1
Delay	5
Time1	00:00:00
Time2	00:01:00
Description	DO**x** (x = 0...15)
Mode (firm ver 2.0.0)	0 (Sec)

5.2. Digital Inputs (Port B)

Table 3. Port B default settings

Parameter	Value
Mode	0 (Simple reading)
PortA pin	0…7
Remote	No (False)
Description	DI**x** (x = 0...7)

5.3. Analog Inputs (Port C)

Table 4. Port C default settings

Parameter	Value
Refresh	1
LT (Low Threshold)	200
HT (High Threshold)	700
LH (Low Hysteresis)	5
HH (High Hysteresis)	5
Mode	0 (None)
PortA Pin	0…7
Remote	No (False)
Description	AI**x** (x = 0...7)
Min (firm ver 2.0.0)	0.0
Max (firm ver 2.0.0)	1024.0
Label (firm ver 2.0.0)	Units

5.4. Serial Port

Table 5. Serial Port default settings

Parameter	Value
Serial address	0x00
Baud rate	9600
Stop bits	1
Parity	None
Data bits	8
CRC	No
Duplex mode	Full Duplex
Control line	0 (Low during send)
CRC16	No

5.5. System clock

Table 6. System clock default settings

Parameter	Value
Offset (hours)	+2

5.6. Admin

Table 7. Admin default settings

Parameter	Value
IP Address	192.168.0.100
Subnet Mask	255.255.255.0
Default Gateway	192.168.0.1
Remote Server IP: Port	192.168.0.1:1005
NTP Server IP: Remote Port	64.90.182.55: 37
HTTP Port	80
Local Port Range	1005-1009
User Socket Port	1010
Working Mode*	Ethernet 10/100 Mbit
Telnet password	admin
RC4 password	admin
Web password	admin
Access IP	0.0.0.0 (disabled)
Enable Telnet	Yes
Enable RC4 encoding	Yes
Module name (firm ver 2.0.0)	DAEnetIP3
Allow NTP auto-sync. (firm ver 2.0.0)	No
HTTP API password (firm ver 2.0.0)	admin
E-mail server IP :Port (firm ver 2.0.0)	111.222.111.222 : 25
Sender e-mail (firm ver 2.0.0)	sender
Receiver e-mail (firm ver 2.0.0)	receiver
E-mail username (firm ver 2.0.0)	emailusername
E-mail password (firm ver 2.0.0)	emailpassword
E-mail notifications AI (firm ver 2.0.0)	No
E-mail notifications DI (firm ver 2.0.0)	No
E-mail notifications NTP (firm ver 2.0.0)	No
E-mail notifications On Boot (firm ver	No

2.0.0)	
E-mail notification sent each (firm ver 2.0.0)	0 minutes

*Only for DAEnetIP3-Wx. If DAEnetIP3-Ex – this parameter is not available. (Working mode is only Ethernet 10/100 Mbit)

5.7. Wi-Fi Settings

Table 8. Wi-Fi default settings*

Parameter	Value
IP Address	192.168.1.100
Subnet Mask	255.255.255.0
Default Gateway	192.168.1.1
Region	FCC (chn: 1-11)
SSID	Network
Password	admin
Security Mode	WEP64

*Only for DAEnetIP3-Wx. If DAEnetIP3-Ex – these parameters are not available because there is not Wi-Fi interface.

6. Web server

6.1. Overview

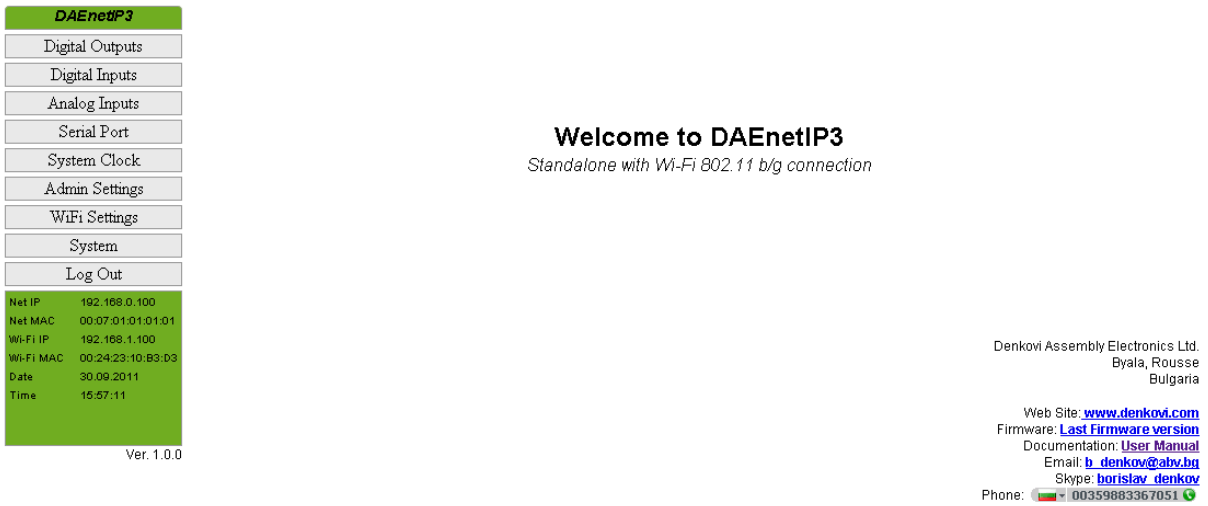

Figure 9. Web access

DAEnetIP3 has built-in web server for configuration (figure 9). All the parameters can be accessed via web browsers like Mozilla, IE and Opera. Some of the pages are refreshed automatically. In this way it is possible to track all the I/O states in real time without manually refreshing the page. The web browser must support JavaScript.

The controller is designed to be in two versions (with Wi-Fi and without Wi-Fi module). It is “smart” and recognizes if there is Wi-Fi add-on module. In this case the web interface will display some extra features for the Wi-Fi 802.11 settings.

6.2. Login page

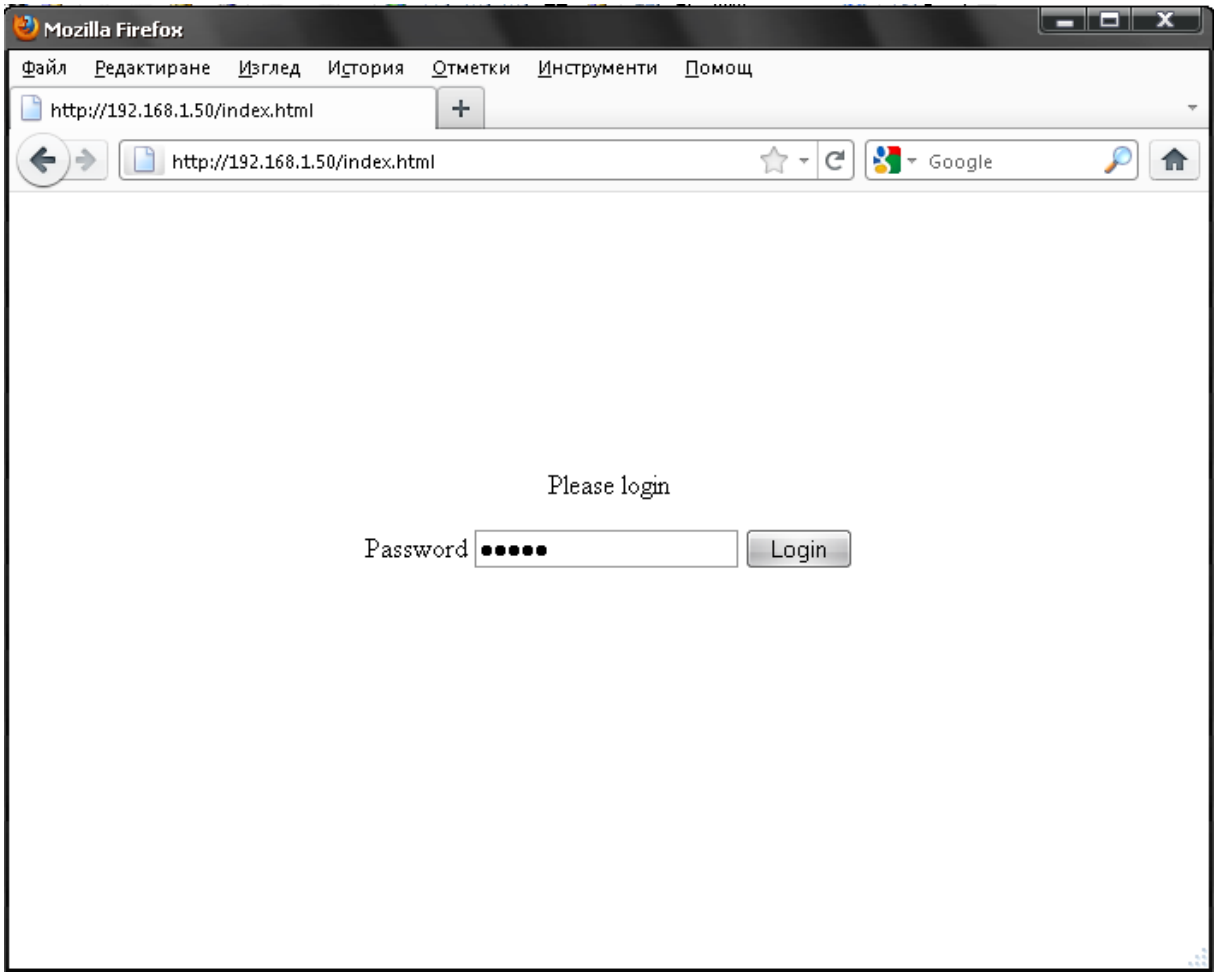

Figure 10. Login page

Initially the web server will require password for login (figure 10). Only one session can be activated at a time. This means if once there is logged user, nobody else will be able to login. If the currently logged user logs out, new user will be able to login. The session has timeout 3 minutes. This means if there is no data transferred over the web 3 minutes, the current session will be stopped and new user will be able to login.

Also it is recommended when the user leaves the web page, firstly to logout.

6.3. Menu

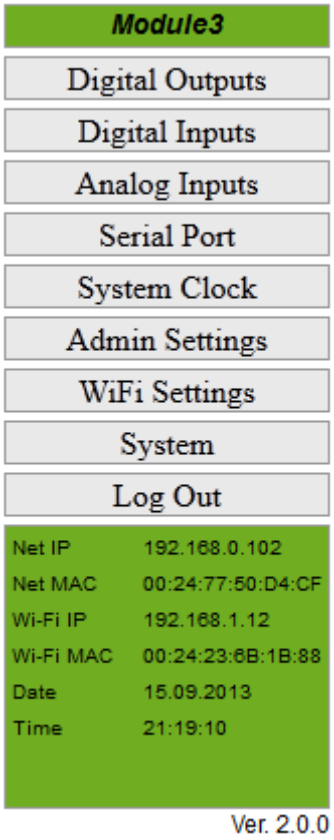

Figure 11. Web navigation

The navigation is organized with frames, because of the limited resources of the controller. On figure 11 they are shown the navigation bars. There is also information about the network settings, RTC date and time and current firmware version.

7. Digital outputs port (Port A)

DAEnetIP3 has 16 bit digital output port with 10 kOhm pull-down resistors to GND.

7.1. Port A web page

Port A - 16 channel digital output port

Pin#	Status	Control	Mode	ON / OFF / Delay / Mode	Time1/Time2	Description
0	1	☑	On/Off	1 / 1 / 5 / sec	00:00:00 / 00:01:00	DO0
1	1	☑	On/Off	1 / 1 / 5 / sec	00:00:00 / 00:01:00	DO1
2	1	☑	On/Off	1 / 1 / 5 / sec	00:00:00 / 00:01:00	DO2
3	1	☑	On/Off	1 / 1 / 5 / sec	00:00:00 / 00:01:00	DO3
4	0	☑	On/Off	1 / 1 / 5 / sec	00:00:00 / 00:01:00	DO4
5	1	☑	On/Off	1 / 1 / 5 / sec	00:00:00 / 00:01:00	DO5
6	1	☑	On/Off	1 / 1 / 5 / sec	00:00:00 / 00:01:00	DO6
7	1	☑	On/Off	1 / 1 / 5 / sec	00:00:00 / 00:01:00	DO7
8	1	☑	On/Off	1 / 1 / 5 / sec	00:00:00 / 00:01:00	DO8
9	1	☑	On/Off	1 / 1 / 5 / sec	00:00:00 / 00:01:00	DO9
10	1	☑	On/Off	1 / 1 / 5 / sec	00:00:00 / 00:01:00	DO10
11	1	☑	On/Off	1 / 1 / 5 / sec	00:00:00 / 00:01:00	DO11
12	1	☑	On/Off	1 / 1 / 5 / sec	00:00:00 / 00:01:00	DO12
13	1	☑	On/Off	1 / 1 / 5 / sec	00:00:00 / 00:01:00	DO13
14	1	☑	On/Off	1 / 1 / 5 / sec	00:00:00 / 00:01:00	DO14
15	1	☑	On/Off	1 / 1 / 5 / sec	00:00:00 / 00:01:00	DO15

Save settings

Set Digital Outpus

Figure 12. Port A web page – 16 digital outputs

7.2. Setting the digital outputs

The 16 bit digital outputs port can be set in two ways. It is possible to set single output line in low/high level or set the whole port. In some modes the user can not set the outputs manually, because they are set by time events, input signals or another DAEnetIP3 controller. Via web browser, it is possible to be set only at once all of them.

7.3. Reading the digital outputs state (status)

It is possible to read digital output states anytime. User can read single line or the whole port (all the 16 output lines).

7.4. PortA initial state

Bellow are given the initial states of PortA depending on the selected mode:

- On/Off setting - last state before power off
- On/Off setting and digital input - according to the input
- On/Off setting and analog input - according to the input

- On/Off setting and schedule - according to the time
- On/Off setting and remote - 0
- Inverting - last state before power off
- Inverting and digital input - 0
- Inverting and analog input - 0
- Inverting and schedule - 1
- Inverting and remote - 0
- Pulses - last enable pulses state before power off
- Pulses and digital input - enabled/disabled according to the input
- Pulses and analog input - enabled/disabled according to the input
- Pulses and schedule - enabled/disabled according to the time
- Pulses and remote - 0
- Timer - 0
- Timer and digital input - 0
- Timer and analog input - 0
- Timer and remote - 0

7.5. Port A modes

DAEnetIP3 supports 19 digital output modes

7.5.1. On/Off setting

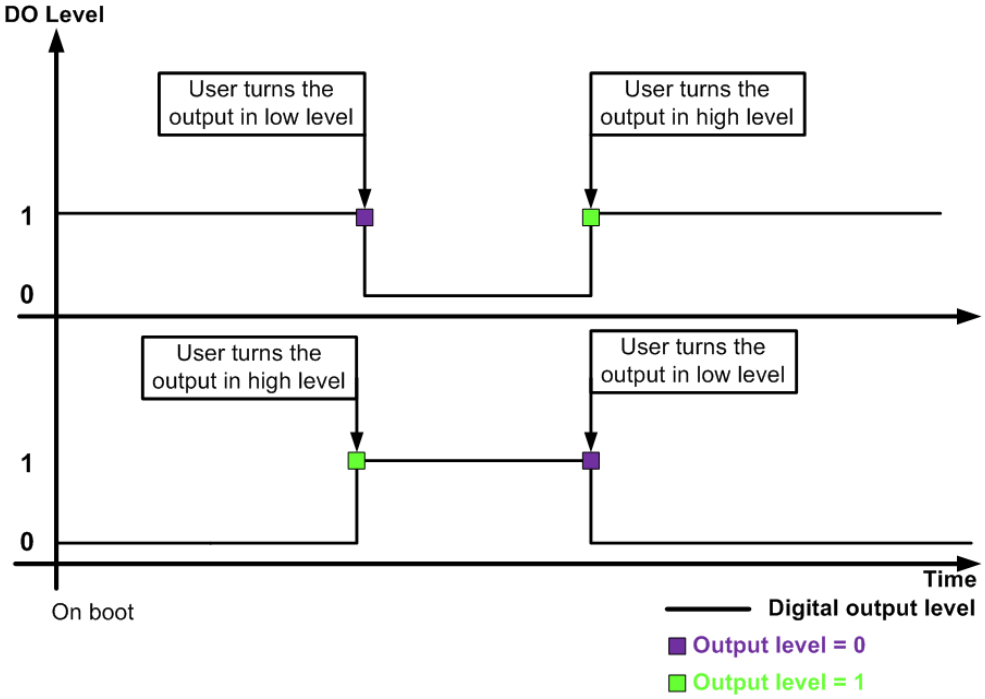

Figure 13. On/Off setting

This is simple setting of the outputs (figure 13). The user can set the output in **ON** (logical 1, high level) and in **OFF** (logical 0, low level).

7.5.2. On/Off setting and digital input

In this mode (figure 14) the output is set according falling/rising edge of some digital input level. The user can not control manually the outputs in this mode.

- When DI is in “Set output during rising edge” mode, the DO is set in high level during rising edge of the DI level. DO is set in low level during falling edge of the DI level.
- When DI is in “Set output during falling edge” mode, the DO is set in low level during rising edge of the DI level. DO is set in high level during falling edge of the DI level.

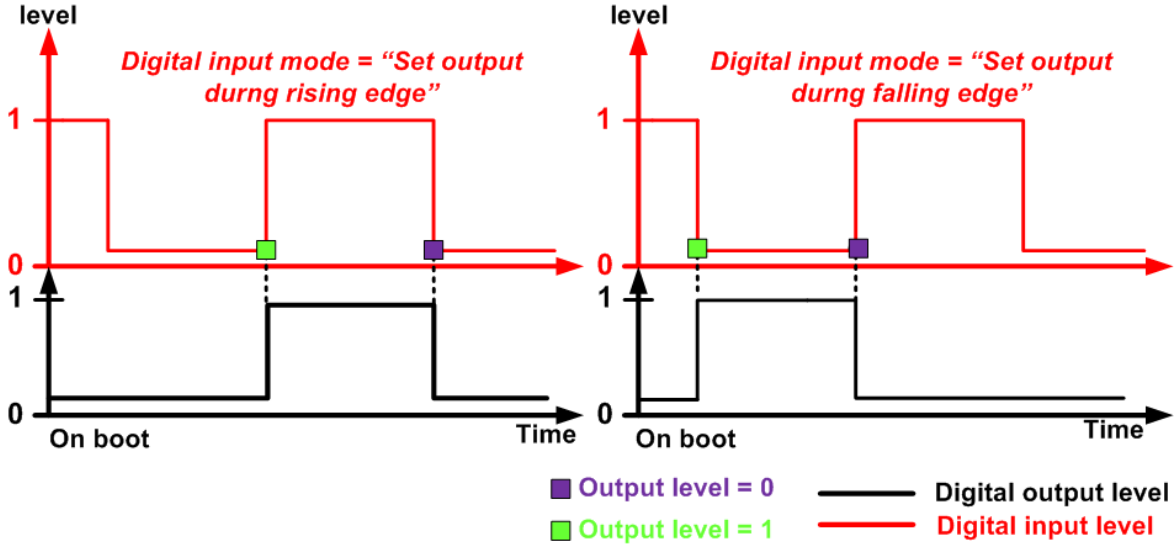

Figure 14. On/Off setting and digital input

7.5.3. On/Off setting and analog input

On figure 15 is shown the dependence between digital output (On/Off setting) and analog input (the four modes). The user can not control manually the outputs in this mode.

- In “Low” mode the output level is set high when the rising analog input level crosses the LT+LH/2 limit and set low when the falling analog input level crosses the LT-LH/2 limit.
- In “High” mode the output level is set low when the rising analog input level crosses the HT+HH/2 limit and set high when falling analog input level crosses the HT-HH/2 limit.
- In “Acc” mode the output level is set high when the rising analog input level crosses the HT+HH/2 and set low when the rising analog input level crosses the LT-LH/2.
- In “Low/High” mode the output level is set high when the rising (falling) analog input level crosses the LT+LH/2 (HT-HH/2). The output level is set low when the rising (falling) analog input level crosses the HT+HH/2 (LT-LH/2).

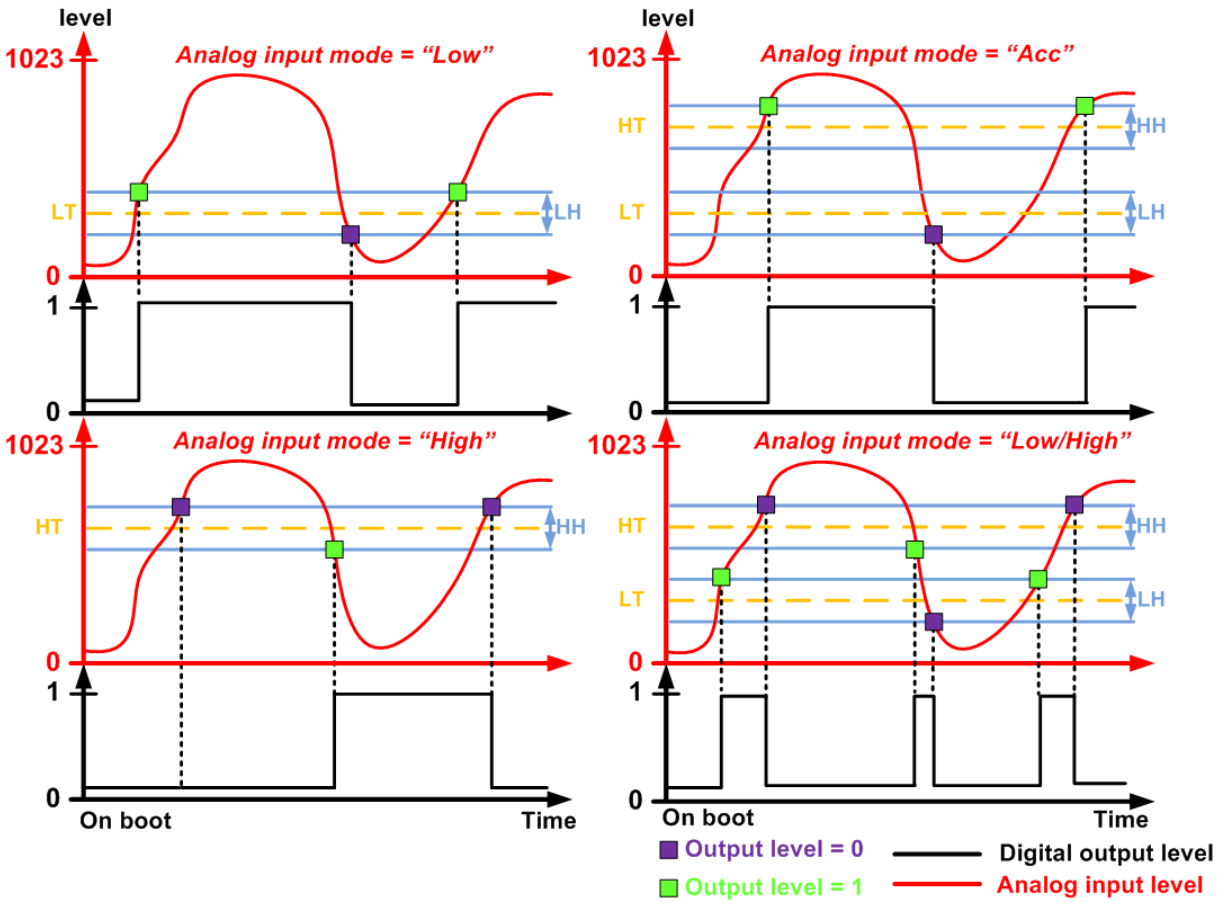

Figure 15. On/Off setting and analog input

7.5.4. On/Off setting and schedule

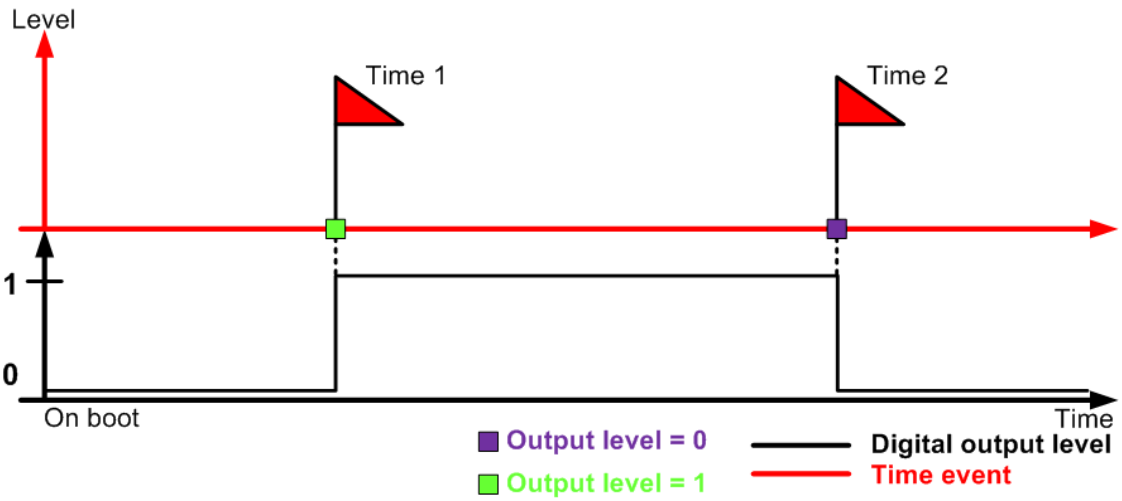

Figure 16. On/Off setting and schedule

This mode (figure 16) is designed for setting digital outputs based on time events. There are two time events – *Time 1* and *Time 2*. When *Time 1* appears the output will be turned in high level and when Time 2 appears it will be in low level. There is no matter is *Time 1* is before *Time 2* or the Time 2 is before Time 1. Time 1 is

determined by the field 'Time1' and Time 2 by 'Time2' from the configuration web page. The user can not control manually the outputs in this mode.

7.5.5. On/Off setting and remote

In this mode the output can be controlled by input (digital or analog) from another DAEnetIP3 controller over the network. The user can not control manually the outputs in this mode.

7.5.6. Inverting

In this mode the user is able to invert the digital outputs. If the previous output state was 0, after inverting it will be 1 and vices versa.

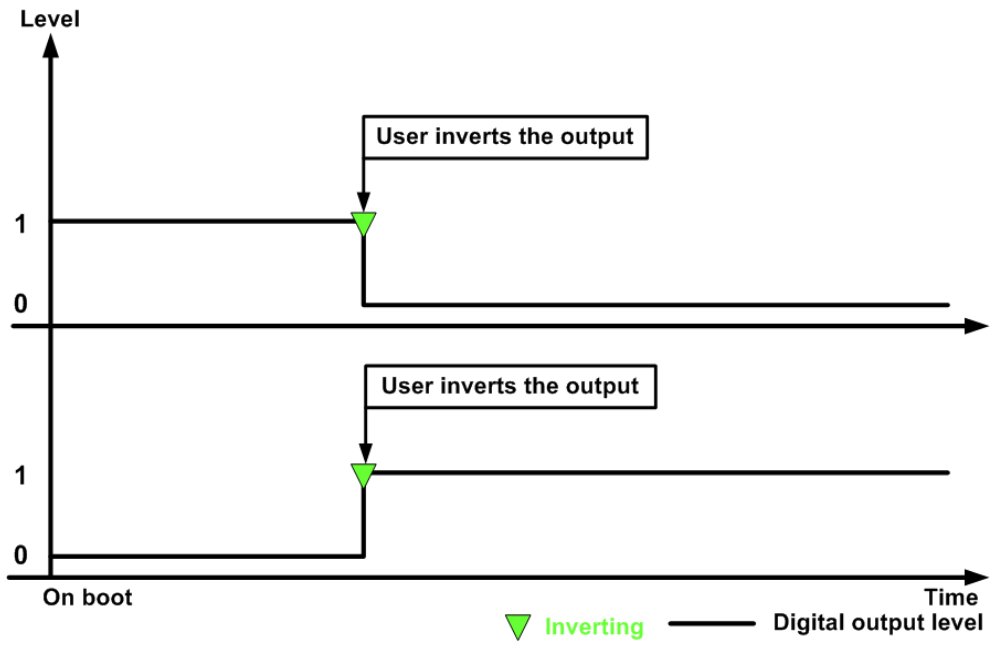

Figure 17. Inverting

7.5.7. Inverting and digital input

In this mode (figure 18) the digital outputs are inverted by falling/rising slope of some digital input. The user can not control(invert) manually the output state in this mode.

- When DI is in "Set output during rising slope" mode, the DO state is inverted during rising slope of the DI level.
- When DI is in "Set output during falling slope" mode, the DO state is inverted during falling slope of the DI level.

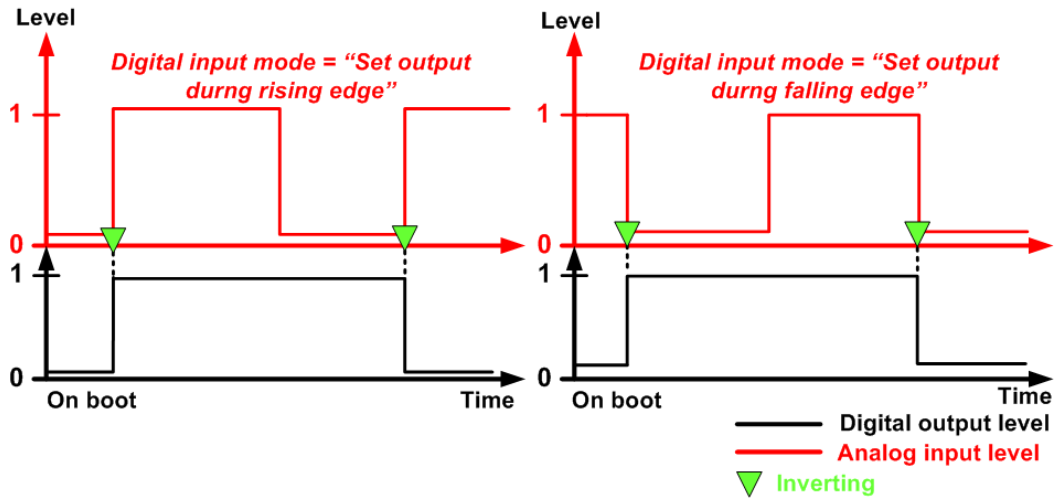

Figure 18. Inverting and digital input

7.5.8. Inverting and analog input

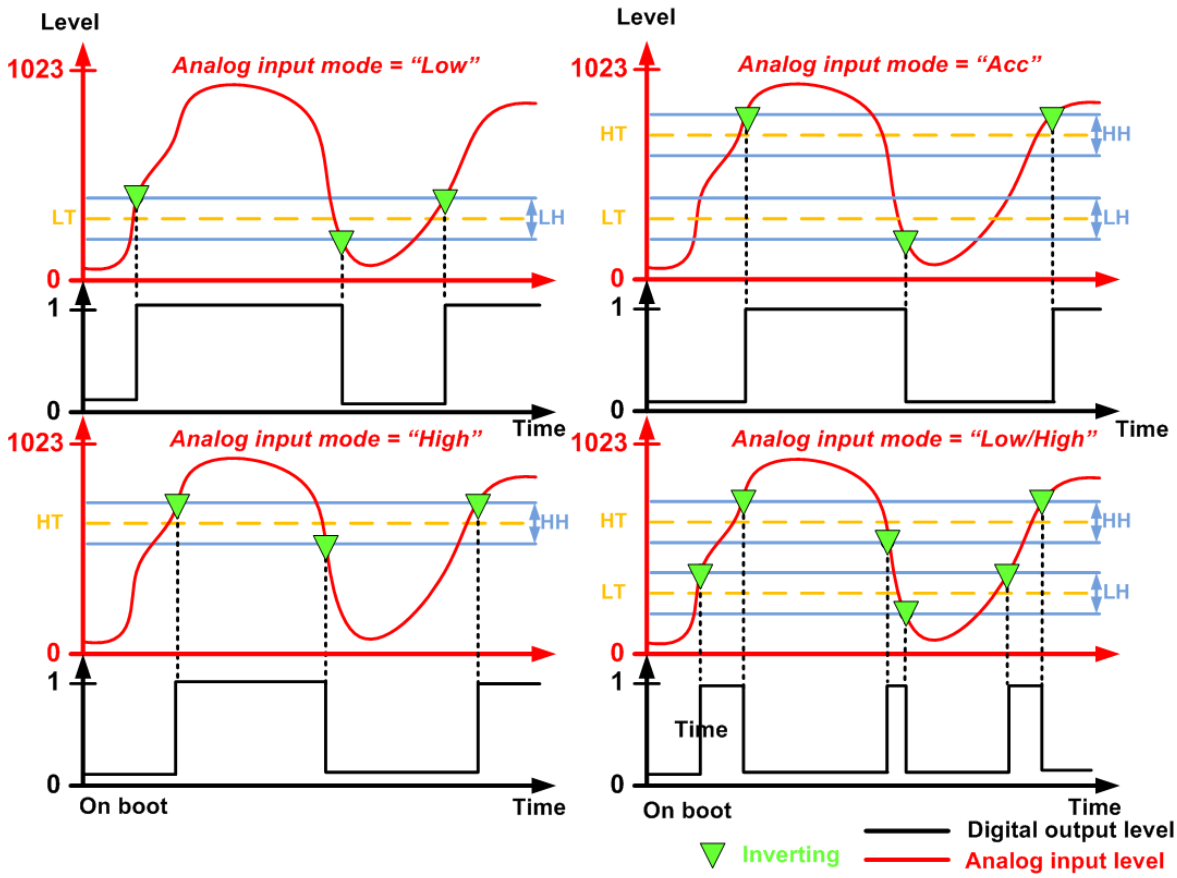

Figure 7. Inverting and analog input

In this mode (figure 19) the digital output state is inverted when some analog input level crosses the given threshold. In the figure it is shown the graphics when the initial output state is 0. If the initial state was 1, the logic is the same but the output levels will be reversed, because of the inverting. The user can not control manually the outputs in this mode.

- In “Low” mode the output level is inverted when the rising analog input level crosses the LT+LH/2 limit and when the falling analog input level crosses the LT-LH/2 limit.
- In “High” mode the output level is inverted when the rising analog input level crosses the HT+HH/2 limit and when falling analog input level crosses the HT-HH/2 limit.
- In “Acc” mode the output level is inverted when the rising analog input level crosses the HT+HH/2 and when the rising analog input level crosses the LT-LH/2.
- In “Low/High” mode the output level is inverted when the rising (falling) analog input level crosses the LT+LH/2 (HT-HH/2) and when the rising (falling) analog input level crosses the HT+HH/2 (LT-LH/2).

7.5.9. Inverting and schedule

In this mode (Figure 20) the digital output states are inverted by the two time events (Time 1 and Time 2). The user can not control manually the outputs in this mode.

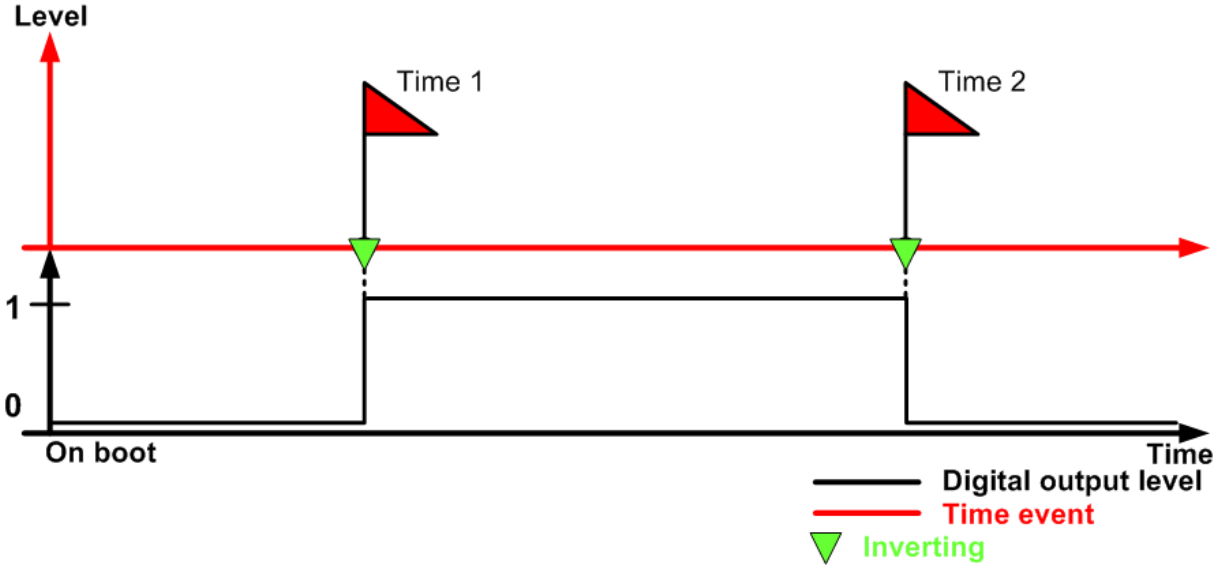

Figure 20. Inverting and schedule

7.5.10. Inverting and remote

In this mode the output can be inverted by input (digital or analog) from another DAEnetIP3 controller over the network. The user can not control manually the outputs in this mode.

7.5.11. Pulses

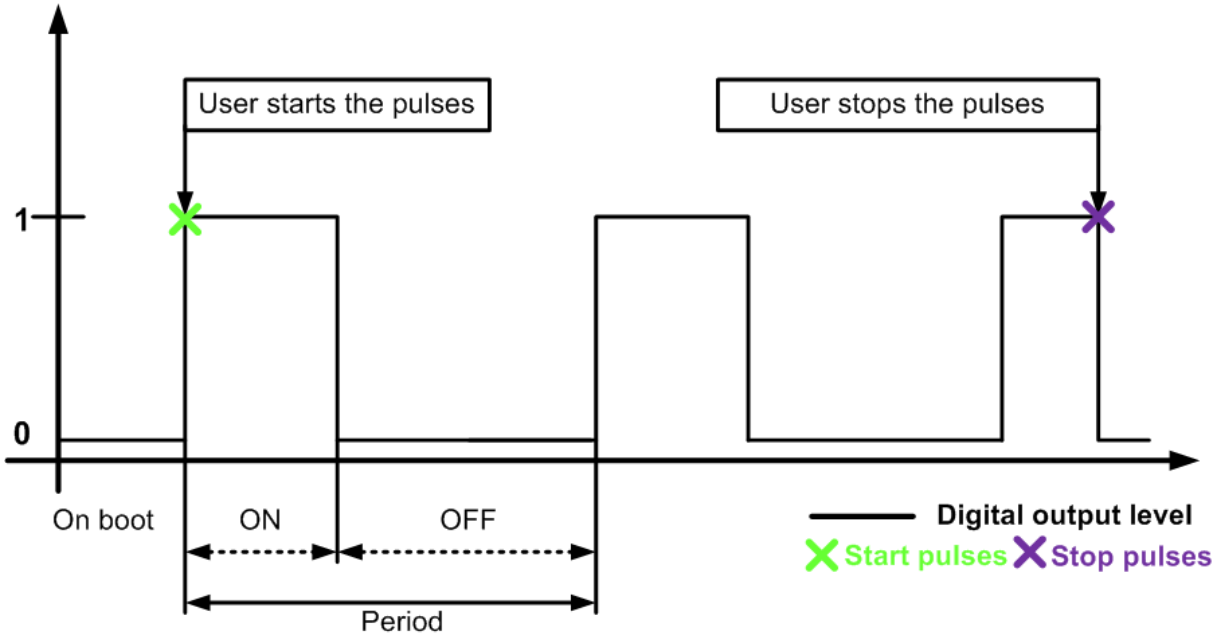

Figure 21. Pulses

In this mode (figure 21) the digital output is set in 1 for some time (ON time) and after that set in 0 for some time (OFF time). In this way the DAEnetIP3 controller can make pulses with custom period based on ON/OFF times. The user can starts (stops) the pulses. The pulse generating always starts with the ON time. When the user stops the pulses, the output state becomes 0.

7.5.12. Pulses and digital input

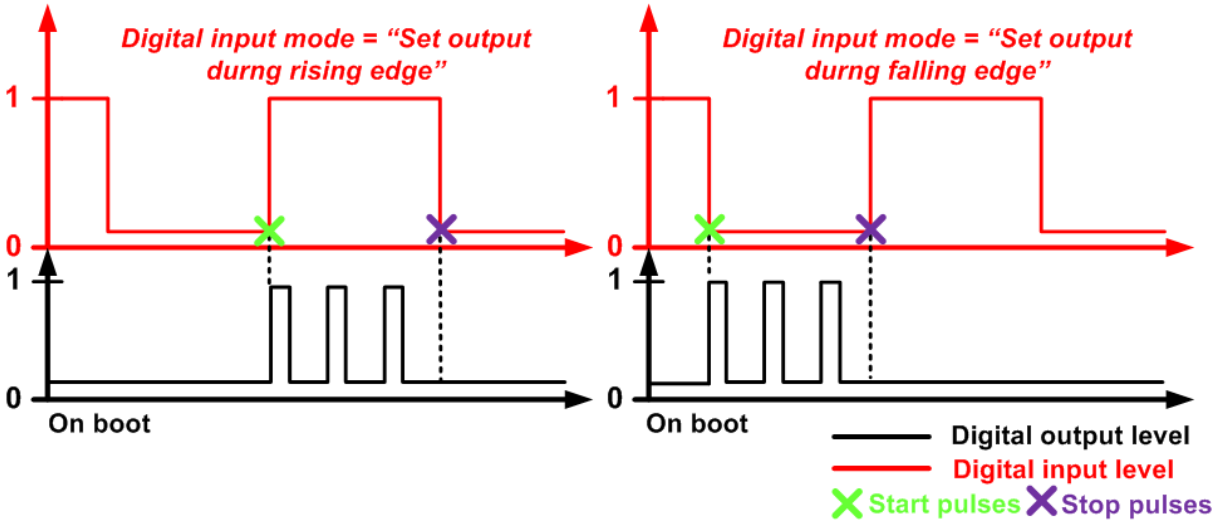

Figure 22. Pulses and digital input

This mode (figure 22) configures the outputs to work as pulse generator based on digital input falling/rising slope. Actually the rules for pulse generation are the same as point 7.5.1. When the input level makes falling or rising edge, the pulse generation is started or stopped (depending on the digital input mode). The user can not control manually the outputs in this mode.

- When DI is in “Set output during rising edge” mode, the pulses are started during rising edge of the DI level and during falling edge of the DI level.
- When DI is in “Set output during falling edge” mode the pulses are started during rising edge of the DI level and stopped during falling edge of the DI level.

7.5.13. Pulses and analog input

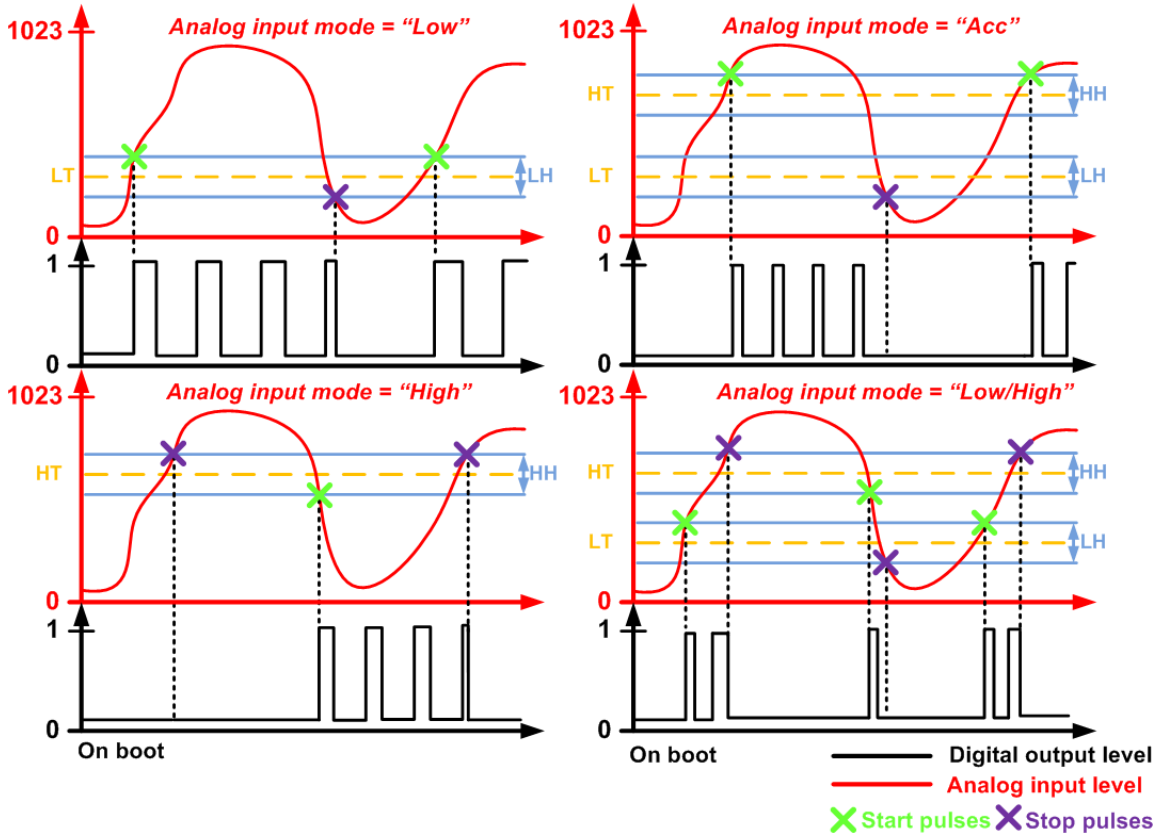

Figure 23. Pulses and analog input

In this mode (figure 23) when some analog input level crosses the given threshold, the pulse generating is started or stopped. The user can not control manually the outputs in this mode.

- In “Low” mode pulses are started when the rising analog input level crosses the LT+LH/2 limit and stopped when the falling analog input level crosses the LT-LH/2 limit.
- In “High” mode pulses are started when the rising analog input level crosses the HT+HH/2 limit and stopped when falling analog input level crosses the HT-HH/2 limit.
- In “Acc” mode the pulses are started when the rising analog input level crosses the HT+HH/2 and stopped when the rising analog input level crosses the LT-LH/2.
- In “Low/High” pulses are started when the rising (falling) analog input level crosses the LT+LH/2 (HT-HH/2). The pulses are stopped when the rising (falling) analog input level crosses the HT+HH/2 (LT-LH/2).

7.5.14. Pulses and schedule

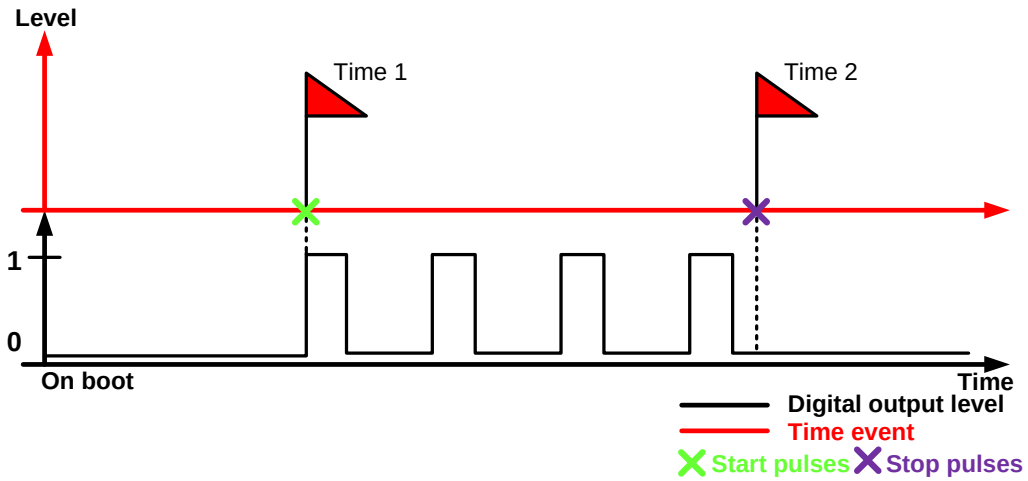

Figure 8. Pulses and schedule

On figure 24 it is shown the digital output mode “Pulses and schedule”. If the moment given by Time 1 appears, then pulse generating is started. If Time 2 appears, then pulse generating is stopped. The user can not control manually the outputs in this mode.

7.5.15. Pulses and remote

In this mode the pulse generating for this digital output can be started/stopped by input (digital or analog) from another DAEnetIP3 controller over the network. The user can not control manually the outputs in this mode.

7.5.16. Timer

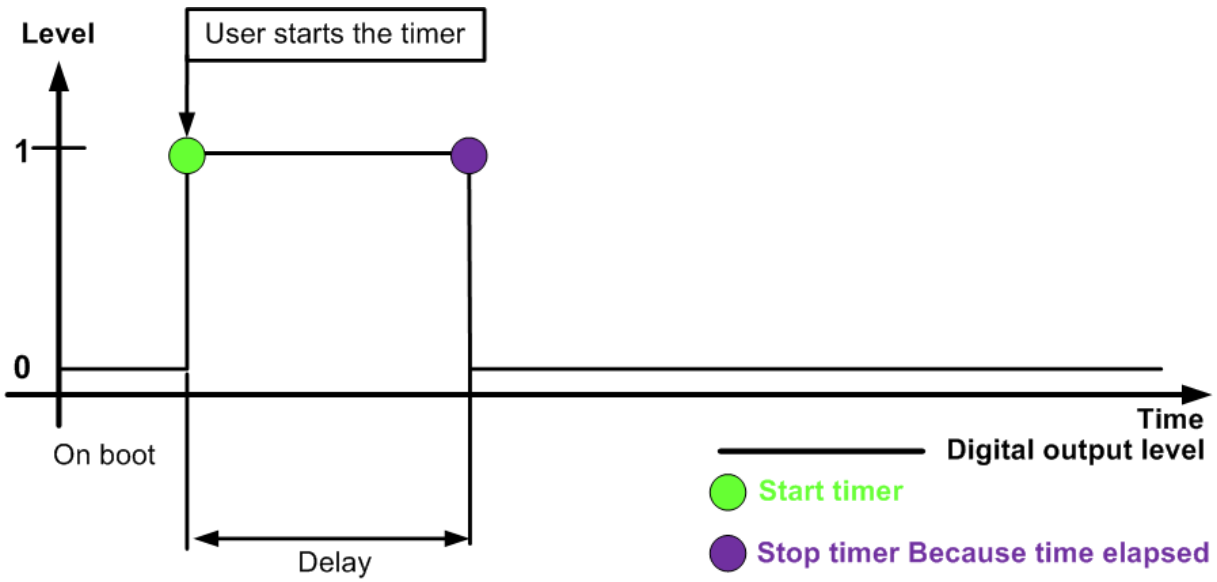

Figure 9. Timer

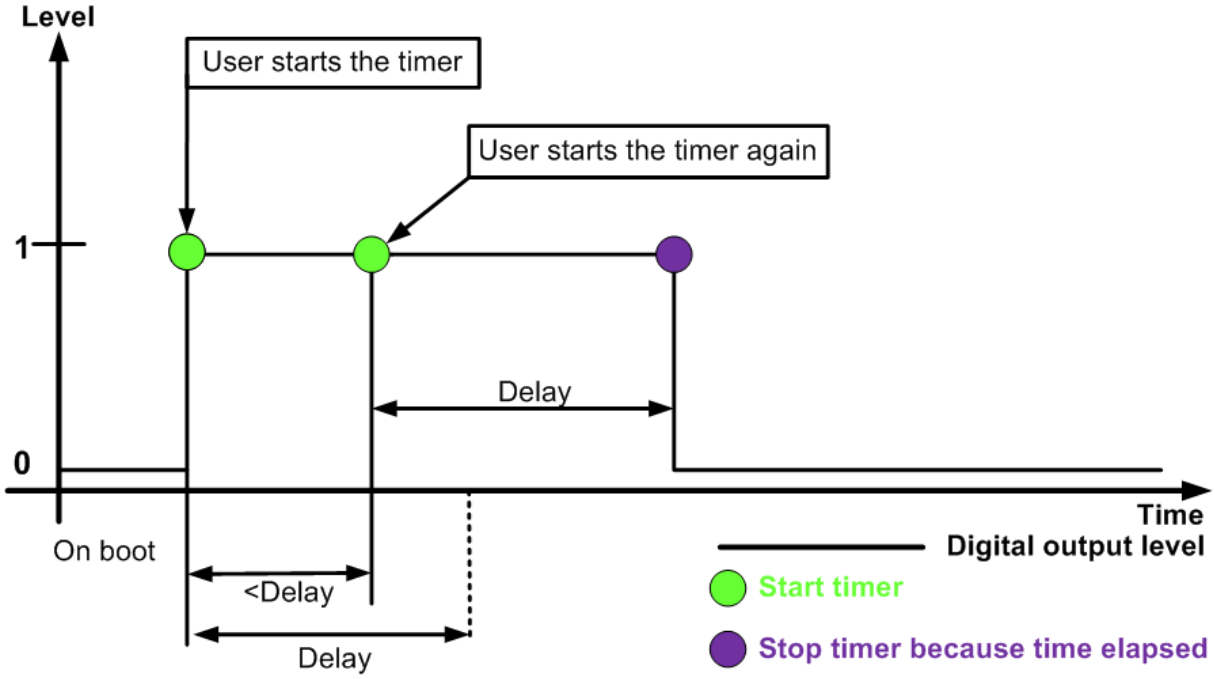

Figure 10. Timer requests

This mode (figure 25) allows the given digital output mode to make single (one-shoot) pulse with custom delay. The pulse can not be stopped, only can be started. If the current pulse is started and not elapsed and new request for single pulse is appeared then the pulse will be stopped after the delay time after the last pulse is started (figure 26). The reason for this is that the DAEnetIP3 controller accepts that the last received request for single pulse is with highest priority. The user can not control manually the outputs in this mode.

7.5.17. Timer and digital input

This mode (figure 27) configures the digital output to work as single pulse generator based on digital input falling/rising slope. Because the pulse can not be stopped, it can be only started during falling/rising slope depending on the mode in which the digital input works in. Note that if the time between two falling (rising) slopes is less than the delay of the single pulse, the digital output level will be in 1 until this interval became greater than Timer delay. The user can not control manually the outputs in this mode.

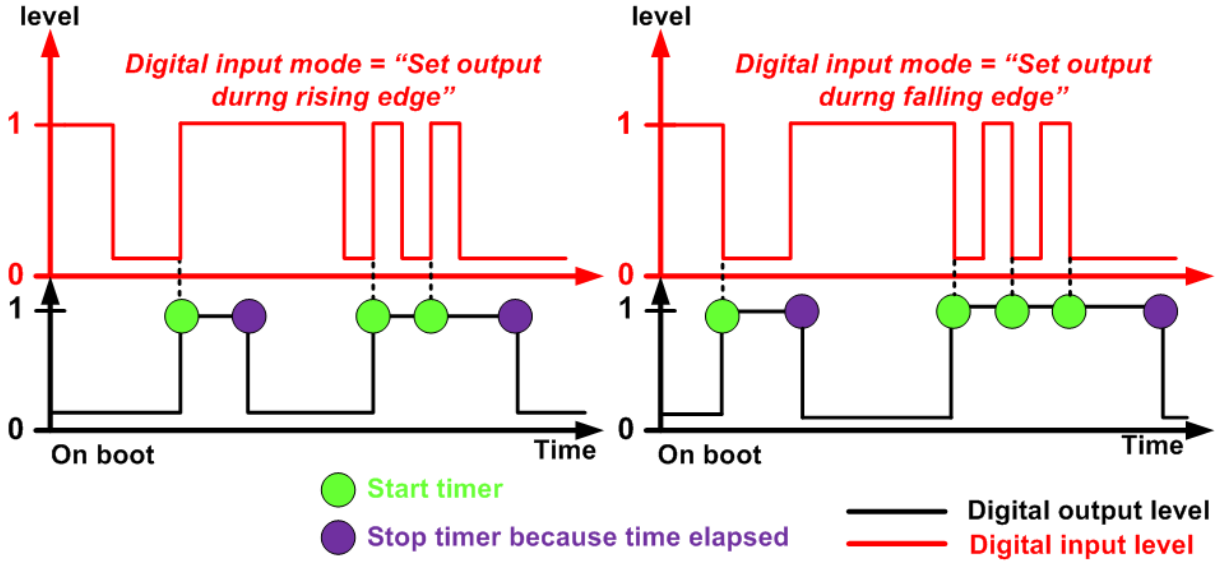

Figure 11. Timer and digital input

7.5.18. Timer and analog input

This mode combines the timer mode and analog inputs (figure 28). The user can not control manually the outputs in this mode.

- In "Low" mode the timer is started when the rising analog input level crosses the LT+LH/2 limit.
- In "High" mode the timer is started when the falling analog input level crosses the HT-HH/2 limit.
- In "Acc" mode the timer is started when the rising analog input level crosses the HT+HH/2 limit.
- In "Low/High" mode the timer is started when the rising analog input level crosses the LT+LH/2 limit or the falling analog input level crosses the HT-LH/2 limit.

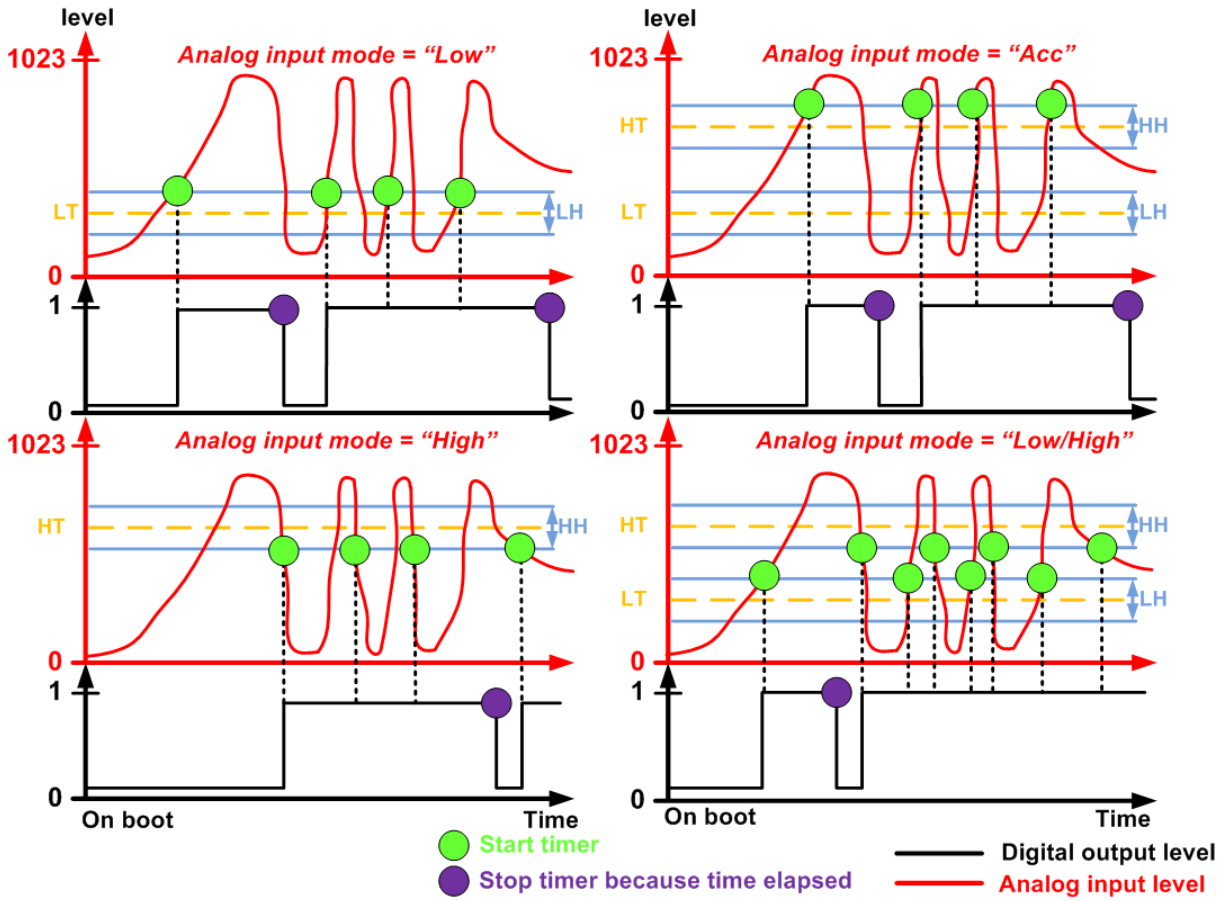

Figure 12. Timer and analog input

7.5.19. Timer and remote

In this mode the single pulse (timer) can be started by input (analog or digital) from another DAEnetIP3 controller over the network. The user can not control manually the outputs in this mode.

7.6. "ON" value

This value is available for each digital output and determines the ON time (the time when the output is in high level) when the output works in some of the pulse modes. The ON value is >=1 and <=99.

7.7. "OFF" value

This value is available for each digital output and determines the OFF time (the time when the output is in low level) when the output works in some of the pulse modes. The OFF value is >=1 and <=99.

7.8. "Delay" value

This value is available for each digital output and determines the one shot pulse delay time when the output works in some of the timer modes. The Delay value is >=1 and <=99.

7.9. "Mode" value

This value is available for each digital output and determines if the ON, OFF and Delay values are in seconds, minutes or hours.

7.10. "Time 1" value

This value is available for each digital output and determines the Time 1 moment when the output works in some of the schedule modes. The Time 1 value is with format *hh:mm:ss*

7.11. "Time 2" value

This value is available for each digital output and determines the Time 2 moment when the output works in some of the schedule modes. The Time 2 value is with format *hh:mm:ss*

7.12. Description

Description text for each output. It can string with the following chars: 'a'-'z', 'A'-'Z', '0'-'9', '_' and '.'.

8. Digital Inputs Port (Port B)

Port B is 8 bit digital inputs port. Each channel has pull-up resistor to +3.3V.

8.1. Port B web page

Port B - 8 channel digital input port

Pin#	Status	Mode	PortA Pin	Remote	Description
0	0	Set output during rising edge	Pin 0	☑	DI0
1	0	Simple reading	Pin 14	☐	DI1
2	0	Set output during falling edge	Pin 9	☐	DI2
3	0	Simple reading	Pin 3	☐	DI3
4	0	Simple reading	Pin 4	☑	DI4
5	0	Simple reading	Pin 5	☐	DI5
6	0	Simple reading	Pin 1	☐	DI6
7	0	Simple reading	Pin 7	☐	DI7

Save settings

Figure 29. Port B web page – 8 x digital inputs

8.2. Reading the digital inputs

The digital inputs can be read separately (only single line) or it can be read the whole port at a time. The state of the digital input mode can be read anytime and it doesn't matter in what mode works each input channel.

The controller has simple digital input filter. It measures the signal level on the digital input pin and stores it in variable with name diValue. This variable will contain 0 or 1 (depending what was the level detected by the controller). After about 100 ms, the controller measures the input level again and stores the new value in diNewValue. If the diValue is different than diNewValue that's mean the input level is not stable and the controller does not accept it. But if diValue is the same as diNewValue that's mean the digital input signal is stable and it can be accepted. After that diValue = diNewValue and after about 100ms the algorithm is repeated. In this way DAEnetIP3 has simple digital input filter. The controller can handle only digital signals with frequency less than 10Hz (1/0.1s).

8.3. Port B modes

8.3.1. Simple reading

This mode is simple reading of the digital inputs value. There are no reactions based on this input. In this mode it is just for monitoring.

8.3.2. Set output during rising edge

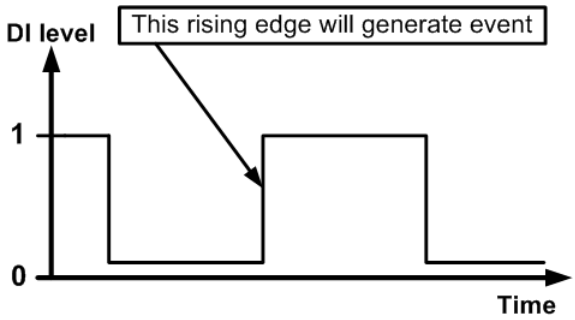

Figure 30. “Set output during rising slope” mode

In this mode (figure 30) DAEnetIP3 controller generates event if it is detected rising edge of the digital input. The type of the event depends on the mode of the attached digital output to this input.

8.3.3. Set output during falling edge

In this mode (figure 31) DAEnetIP3 controller generates event if it is detected falling edge of the digital input. The type of the event depends on the mode of the attached digital output to this input.

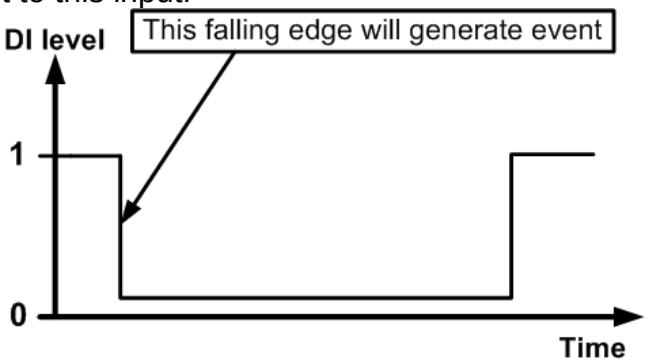

Figure 31. “Set output during falling slope” mode

8.3.4. “Port A pin” value

This is abstract variable that is available for each digital input. It contains the number of some of the digital output lines. It determines which is the attached output line to this input. This means which output will react when this input detects falling/rising edge of the input signal.

8.3.5. “Remote” value

This boolean value (accept only true/false) is available for each digital inputs and determines if the digital output is of the current DAEnetIP3 controller or it is of another DAEnetIP3 controller in the network. If the value is “true” or 1 then the input controls another DAEnetIP3’s digital output, otherwise (if “false” or 0) it controls the current DAEnetIP3 digital output line.

8.3.6. Description

Description text for each input. It can string with the following chars: ‘a’-‘z’, ‘A’-‘Z’, ‘0’-‘9’, ‘_’ and ‘.’.

9. Analog Inputs Port (Port C)

Port C is 8 channel analog input port (8 x ADC). The reference voltage is 2.048VDC and each channel is with 10 bit resolution (1024).

9.1. Port C Web page

Port C - 8 channel ADC port

Pin#	Value	Refresh	LT	HT	LH	HH	Min	Max	Label	Mode	PortA Pin	Remote	Description
0	123Volts 123	1	50	700	5	5	0.0	1024.(	Volts	Low	0		Sensor1
1	306C 306	1	200	700	5	5	0.0	1024.(	C	Low	1		Temp1
2	269F 269	1	200	700	5	5	0.0	1024.(	F	Low	2		Temp2
3	224cm 224	1	200	700	5	5	0.0	1024.(	cm	Low	3		distance
4	193Units 193	1	200	700	5	5	0.0	1024.(	Units	Low	4		AI4
5	877m 877	1	200	700	5	5	0.0	1024.(	m	Low	5		distance2
6	438gr 438	1	200	700	5	5	0.0	1024.(	gr	Low	6		weight
7	146RH 146	1	200	700	5	5	0.0	1024.(	RH	Low	7		hummidity

Save settings

Figure 32. Port C web page – 8 x analog inputs

9.2. Reading the analog inputs

Each of the eight analog inputs can be read by any time. The returned value is a number between 1 and 1023.

Each analog input has software filter. The filter is shown on figure 33.

Figure 33. Structure of ADC filter

The filter is actually buffer (array) with 8 elements. When the user (or firmware) reads some analog input value, actually the returned result is the sum of all elements divided to 8 (the length of the buffer). In this way it is retrieved the average value of the analog signal and not the moment (which very often may not be correct).

The time interval between two measured values (elements) is determined by the user. It is called *Refresh time.* The minimum value is 100ms. **So single reading of the analog input channel may be minimum 0.8 seconds.**

The algorithm for filling the buffer is showed on figure 34. This is actually FIFO (First In First Out) buffer.

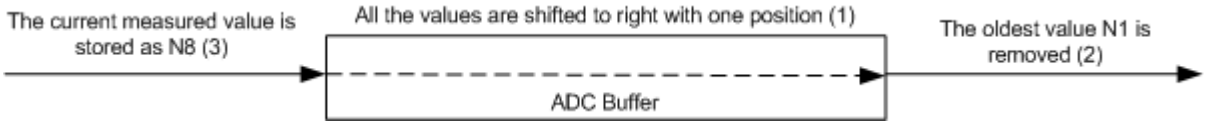

Figure 34. ADC FIFO buffer

1. Firstly, it is performed right sift.
2. Secondly, the oldest value (N1, which came first) now is removed
3. Thirdly, the new measured ADC value is stored as N8 (the newest value)

This cyclic action is performed with period "*Refresh Time*".

The formula for calculating the analog input voltage is given below:

$$Vin[n] = \frac{Ain[n] * 2.048}{1024}, V$$

where Vin is the voltage of the ADC channel and n is the number of the channel (from 0 up to 7). The reference voltage is 2.048V.

*For example if we get ADC value = 512 from channel 0 (PortC.0), the voltage would be 512*2.048/1024=1.024 Volts*

The ADC value can be read also directly by special command in measurement units (for example in C, F, V, m...), depending on the used sensor. This is also so called **analog inputs linearization**. This is usually used when there is connected sensor to the analog input. This is also so called software calibration and it can be done for each analog input separately. The formula is:

$$ADC\_value[n] = \frac{(Max[n] - Min[n]) * Ain[n]}{1024} + Min[n]$$

where ADC_value[n] is the value in measured units (temperature, voltage, hummidity...), Min[n] is the is the minimum value, Max[n] is the maximum value and Ain[n] is the ADC channel value and n is the number of the channel (from 0 up to 7).

For example if we connect LM35DZ temperature sensor to the PortC.0, to get the value directly in °C. LM35DZ can measure from 0 to 100 °C and gives 10mv/°C and at 0°C it gives 0V, so:

Min[0] = 0

Max[0] = 250 this is the value in °C which would appear if the voltage is 2.048V (the value at 1024).

Label = C (there is limitation for the symbols)

So if we get reading 256, that's mean that the value returned by this special command will be 62.5 °C

9.3. Refresh time

This is the period for reading (refreshing) the analog inputs. The minimum value is 1 (0.1s=100ms). The maximum is 99 (9.9ms=9900ms). The default value is 1.

9.4. Low Threshold (LT)

This is one of the thresholds (limits) that is used for events generating. The value is between 1 and 1023.

9.5. High Threshold (HT)

This is the second threshold (limit) that is used for events generating. The value is between 1 and 1023.

9.6. Low Hysteresis (LH)

This value is the hysteresis for the Low Threshold. The value is between 1 and 512.

9.7. High Hysteresis (HH)

This value is the hysteresis for the High Threshold. The value is between 1 and 512.

9.8. Rules

- (HT-HH)>(LT+LH)
- (HT+HH)<1023
- (LT-LH)>0

9.9. Minimum value

This value is equal of ADC value = 0 divisions

9.10. Maximum value

This value is equal of ADC value = 1024 divisions

9.11. Label

This is the label in which is measured the analog input. It may be "V", "C", "RH"...

9.12. Analog Input Mode

Generally there are 5 modes for the analog inputs:

9.12.1. Simple reading

This mode is simple reading of the analog input value. There are no reactions (events) based on this input. It is used only to retrieve the values from the analog inputs (monitoring).

9.12.2. Low

In this mode (figure 35) the threshold for events is the *Low Threshold.*

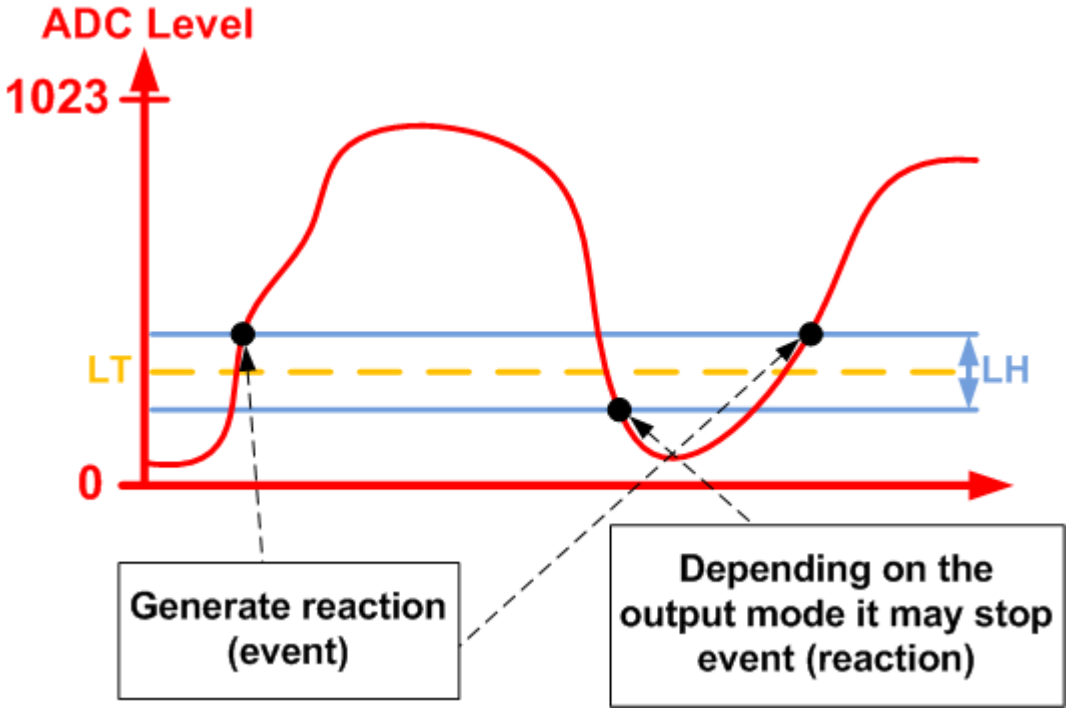

Figure 35. ADC mode “Low”.

9.12.3. High

In this mode (figure 36) the threshold for events is the *High Threshold*.

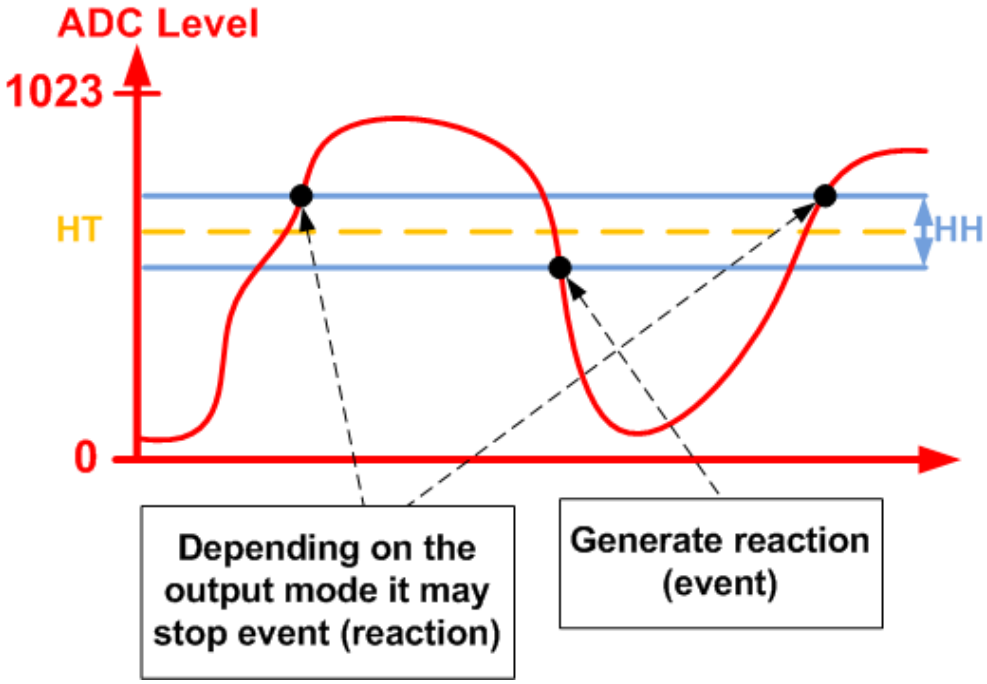

Figure 36. ADC mode “High”.

9.12.4. Acc

In this mode (figure 37) the threshold for events are the *Low and High Threshold*.

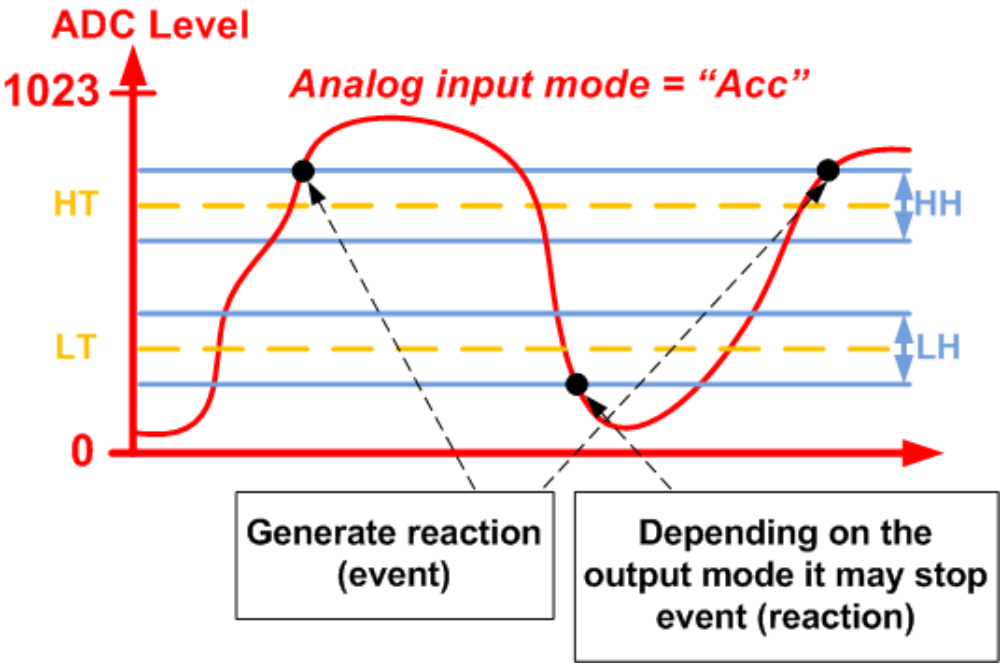

Figure 37. ADC mode "Acc".

9.12.5. Low/High

In this mode (figure 38) the threshold for events are the *Low and High Threshold*.

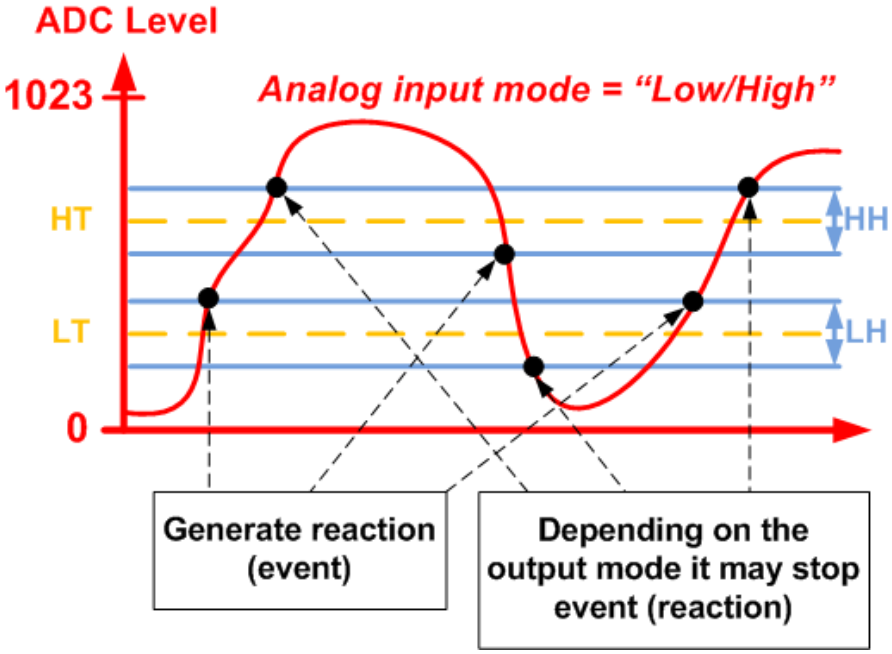

Figure 38. ADC mode "Low/High".

9.12.6. "Port A pin" value

This is abstract variable that is available for each analog input. It contains the number of some of the digital output lines. It determines which is the attached output line to this input. This means which output will react when this input generates event,

9.12.7. "Remote" value

This boolean value (accept only true/false) is available for each analog inputs and determines if the digital output (given by "Remote" value) is of the current DAEnetIP3 controller or it is of another DAEnetIP3 controller in the network. If the value is "true" then the input controls another DAEnetIP3's digital output, otherwise (if "false") it controls the current DAEnetIP3 digital output line.

9.12.8. Description

Description text for each input. It can string with the following chars: 'a'-'z', 'A'-'Z', '0'-'9', '_' and '.'.

10. Distributed (Box-to-box) mode

In some cases it is necessary controlling the digital outputs from digital/analog inputs. But the sensors connected to the inputs may not be close to the devices controlled by the outputs. In such case it is necessary two or more DAEnetIP3 controllers to be connected through the LAN/WAN/WLAN. They should work together and the inputs of one DAEnetIP3 must controls the outputs of another DAEnetIP3 controller. In this mode the controllers connected in one distributed network can work together without computer. DAEnetIP3 support such function. It is called “Distributed mode” or "Box-to-box mode".

Bellow in the documentation will be used the notations controlling DAEnetIP3 (controller with inputs) and controlled DAEnetIP3 (controller). Controlling DAEnetIP3 means this is controller that will send TCP/IP messages based on its inputs changes. Controlled DAEnetIP3 is this one that accepts the messages from controlling DAEnetIP3 and it sets its outputs based on the received TCP/IP messages. From the networking side the controlling DAEnetIP3 is ***client*** and the controlled one is ***server***.

This mode is organized with TCP/IP sockets. Each DAEnetIP3 controller has one socket for output connection and 5 sockets for input connections. The output socket servers for controlling others DAEnetIP3 controllers. Each DAEnetIP3 controller can control only one another DAEnetIP3 controller and can be controlled by maximum 5 DAEnetIP3 controllers.

The user must configure two ports for these sockets. The first port is for outgoing connection socket and this is the port of the controlled DAEnetIP3 (***Remote Port***). The second port is for incoming connections. For example the incoming port is 1000, the other four incoming ports are 1001,1002,1003, 1004 and 1005. Actually this is ***Local Port Range***.

Bellow they are given the parameters used for distributed mode.

10.1. Configuring the digital outputs

Each digital output has 19 modes. Four of these modes allow this output to be controlled by remote input (input that belongs to another DAEnetIP3 controller). These modes are ***On/Off setting and remote, Inverting and remote, Pulses and remote, Timer and remote.*** If the output is not configured to work in some of these modes, it is not possible to be controlled by remote input of another DAEnetIP3 controller.

10.2. Configuring the digital/analog inputs

Each digital/analog input has parameter that describes which is the digital output line that must be controlled by this input. This parameter must be set to the desired output line (1-16) of Port A. The inputs have also another very important booelan parameter (Remote). If this parameter is set that’s mean this input controls output from another DAEnetIP3 controller. If this parameter is not set that’s mean this input controls output from the current DAEnetIP3 controller.

Note that more than one digital/analog inputs may control same digital output line. The user must configure these settings properly to avoid errors.

10.3. Configuring the network parameters

10.3.1. Ethernet (Wi-Fi) IP address, MASK and Gateway

The controllers desired to work as distributed system must be in same network, so the IP address and MASK must be set with appropriate values. Note that the controller may support two kind of interfaces Ethernet and optional Wi-Fi.

10.3.2. Remote server IP

This is the IP address of the DAEnetIP3 controller which digital outputs must be controlled by the current DAEnetIP3 controller.

10.3.3. Local Port Range

These are the five ports determined to accept incoming connections from DAEnetIP3 controller with digital/analog inputs.

10.3.4. Remote server Port

This is the network port of the remote server. This port must be in the Local Port Range of the remote DAEnetIP3 controller (remote server).

10.3.5. Working mode

This parameter determines if the outgoing connection (this is valid for DAEnetIP3 controller with inputs) will be established over Ethernet interface or Wi-Fi interface. Because the controller has two network settings groups (one for Ethernet and one for Wireless), the settings that will be valid for the distributed mode are determined by the working mode (Ethernet or Wi-Fi interface).

10.4. Examples

10.4.1. Example 1: Two DAEnetIP3 controllers connected via UTP cable

This example (figure 39) illustrates how two DAEnetIP3 controllers can be connected via single UTP cable. They can work standalone without computer or router. It is described how one digital input and one analog input of one DAEnetIP3 controller (with inputs) can control two digital outputs of another DAEnetIP3 controller (with outputs).

DAEnetIP3 controller with inputs for example can read some temperature sensor (connected to AI1) and switch (connected to DI1). DAEnetIP3 controller with outputs will listen for requests and set its DO1 and DO2 according the given settings. For example these outputs can control directly relay board.

The settings for the two DAEnetIP3 controllers that must be done are provided also. Note that in this example are used the Ethernet interface network settings (not the Wi-Fi interface).

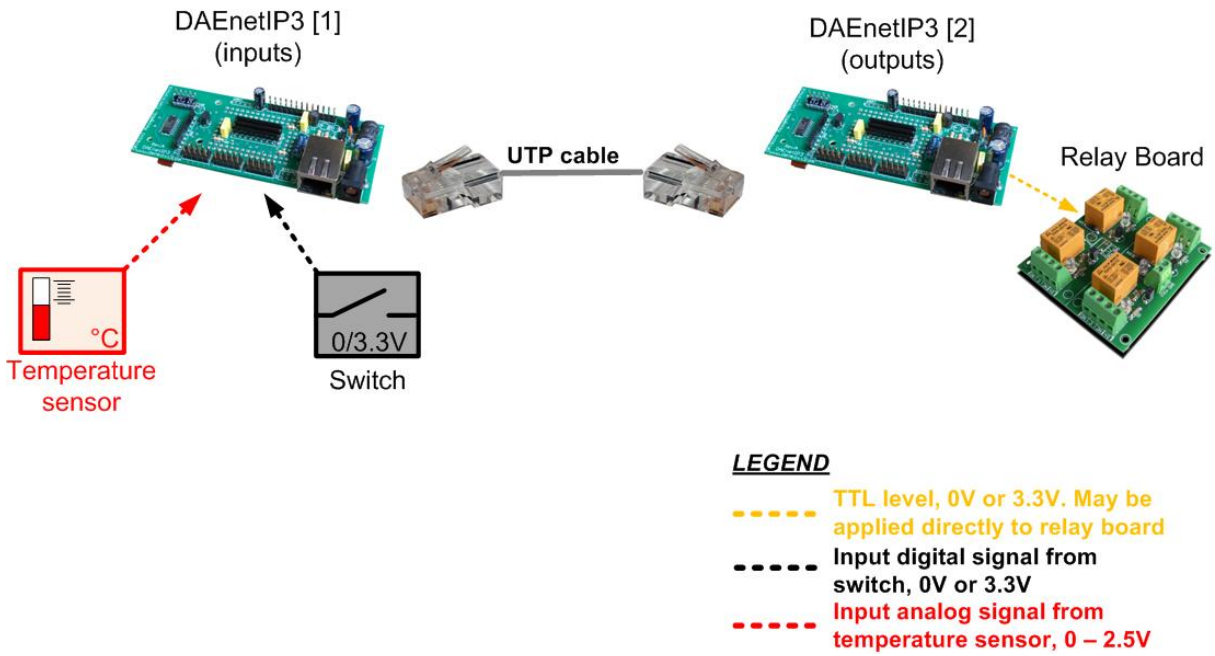

Figure 39. Two DAEnetIP3 controllers connected via UTP cable

Table 9. Example 1 settings

DAEnetIP3 [1] (inputs)	***DAEnetIP3 [2] (outputs)***
Network Settings Eth IP address = 192.168.0.100 Eth Mask = 255.255.255.0 Eth GW = 192.168.0.101 Remote Server IP:Port = 192.168.0.101:1005 Working mode = Ethernet 10/100 Mbit **Analog Input 1 (Port C – Pin 1)** Refresh=1, LT=100,HT=150,LH=10,HH=10, Mode = Low, PortA Pin = Pin 1, Remote = true **Digital Input 1 (Port B – Pin 1)** Mode = Set output during rising slope, PortA Pin = Pin 2, Remote = true	**Network Settings** Eth IP address = 192.168.0.100 Eth Mask = 255.255.255.0 Eth GW = 192.168.0.101 Local Port Range = 1005:1009 **Digital Output 1 (Port A - Pin 1)** Mode = On/Off setting and remote **Digital Output 2 (Port A - Pin 2)** Mode = On/Off setting and remote

10.4.2. Example 2: Two DAEnetIP3 controllers connected via WLAN

This example (figure 40) is extension of the previous one. It demonstrates how two DAEnetIP3 controllers can be connected to each other but this time over WLAN. It is used Wi-Fi router. Again one analog and one digital inputs of one DAEnetIP3 controller control two digital outputs of another DAEnetIP3 controller. It used the Wi-Fi interface, so the Wi-Fi network settings must be set properly.

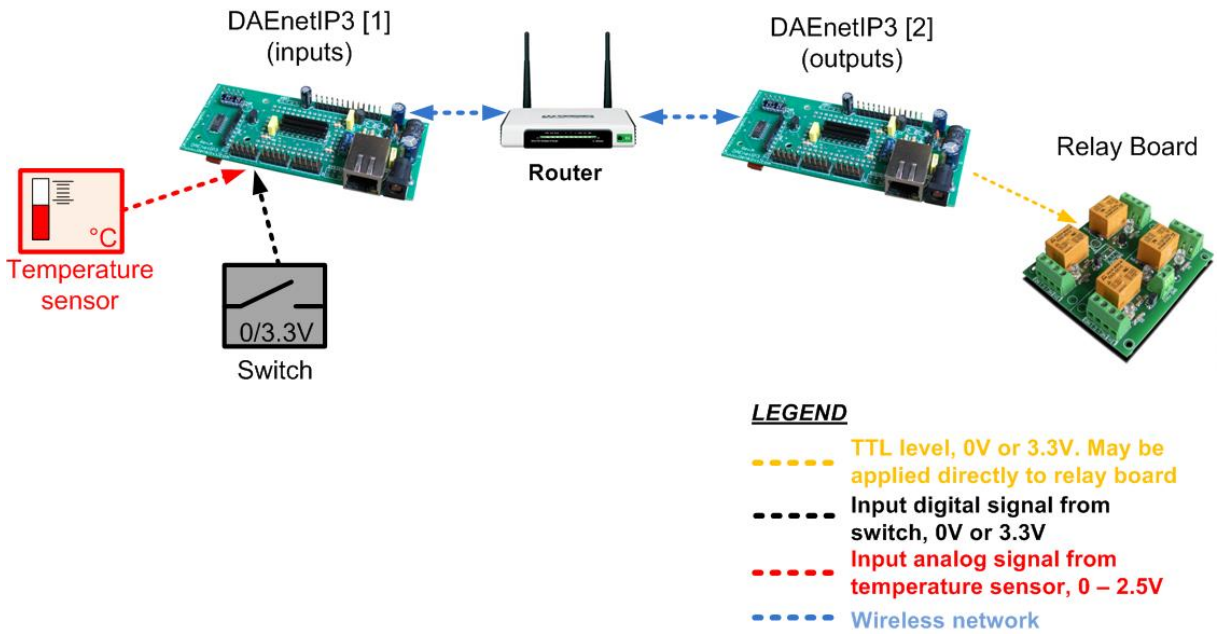

Figure 40. Two DAEnetIP3 controllers connected via WLAN

Table 10. Example 2 settings

DAEnetIP3 [1] (inputs) **Network Settings** Wln IP address = 192.168.1.100 Wln Mask = 255.255.255.0 Wln GW = 192.168.1.1 Remote Server IP:Port = 192.168.1.101:1005 Working mode = Wi-Fi 802.11 b/g **Analog Input 1 (Port C – Pin 1)** Refresh=1, LT=100,HT=150,LH=10,HH=10, Mode = Low, PortA Pin = Pin 1, Remote = true **Digital Input 1 (Port B – Pin 1)** Mode = Set output during rising slope, PortA Pin = Pin 2, Remote = true **Wi-Fi Settings** WEP SSID = Network WEP Key = admin	***DAEnetIP3 [2] (outputs)*** **Network Settings** Wln IP address = 192.168.1.101 Wln Mask = 255.255.255.0 Eth GW = 192.168.1.1 Local Port Range = 1005:1009 **Digital Output 1 (Port A - Pin 1)** Mode = On/Off setting and remote **Digital Output 2 (Port A - Pin 2)** Mode = On/Off setting and remote **Wi-Fi Settings** WEP SSID = Network WEP Key = admin
Router Settings IP address = 192.168.1.1 WEP SSID = Network WEP Key = admin	

10.4.3. Example 3: Two DAEnetIP3 controllers connected via LAN

This example (figure 41) is similar with the previous one. The connection is done with two UTP cables and router. It is used Ethernet interface settings.

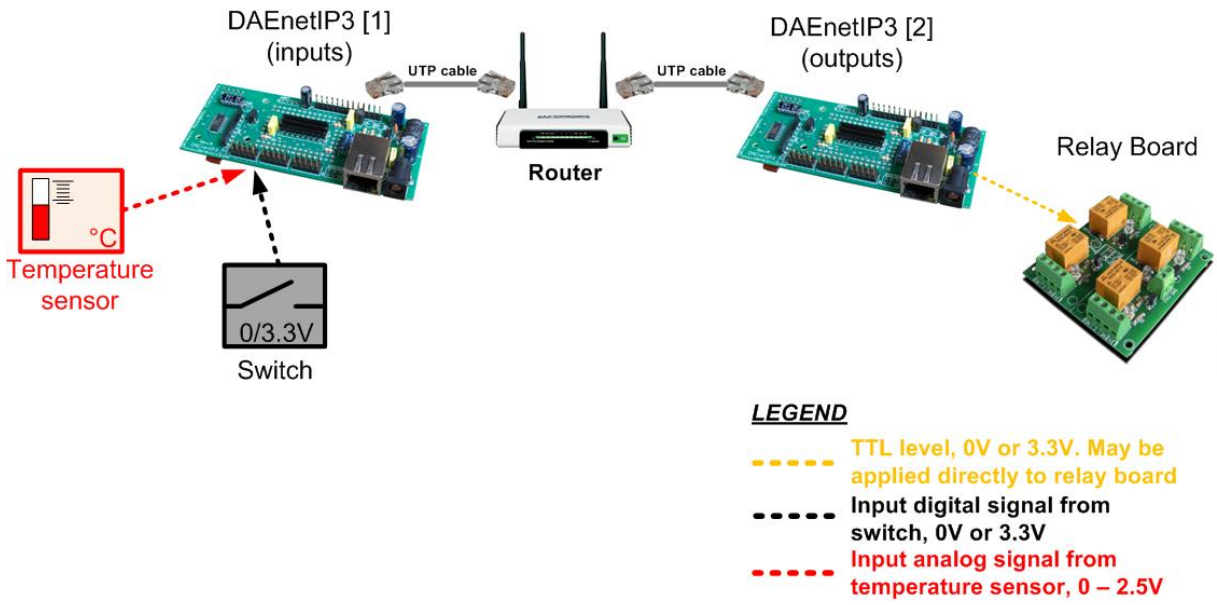

Figure 41. Distributed mode – example 3

Table 11. Example 3 settings

DAEnetIP3 [1] (inputs) **Network Settings** Eth IP address = 192.168.1.100 Eth Mask = 255.255.255.0 Eth GW = 192.168.1.1 Remote Server IP:Port = 192.168.1.101:1005 Working mode = Ethernet 10/100 Mbit **Analog Input 1 (Port C – Pin 1)** Refresh=1, LT=100,HT=150,LH=10,HH=10, Mode = Low, PortA Pin = Pin 1, Remote = true **Digital Input 1 (Port B – Pin 1)** Mode = Set output during rising slope, PortA Pin = Pin 2, Remote = true	***DAEnetIP3 [2] (outputs)*** **Network Settings** Eth IP address = 192.168.1.101 Eth Mask = 255.255.255.0 Eth GW = 192.168.1.1 Local Port Range = 1005:1009 **Digital Output 1 (Port A - Pin 1)** Mode = On/Off setting and remote **Digital Output 2 (Port A - Pin 2)** Mode = On/Off setting and remote
Router Settings IP address = 192.168.1.1	

10.4.4. Example 4: Configuration "5 to 1" over LAN

This example (figure 42) shows how 5 controllers with a temperature sensor can control one controller with outputs over the LAN. That's why the configuration is called "5 to 1". This is the maximum controllers that may control another DAEnetIP3. Note that each controlling DAEnetIP3 has different Remote Port parameter – 1005,1006,1007, 1008, 1009 and they are in the local port range of the controlled DAEnetIP3.

Each of the five controlling DAEnetIP3 [2…6] have one analog input "attached" to 5 (totally) digital outputs of the controlled DAEnetIP3 [1].

In this mode it is possible to measure 5 different temperatures in 5 points and set relays of a single relay board.

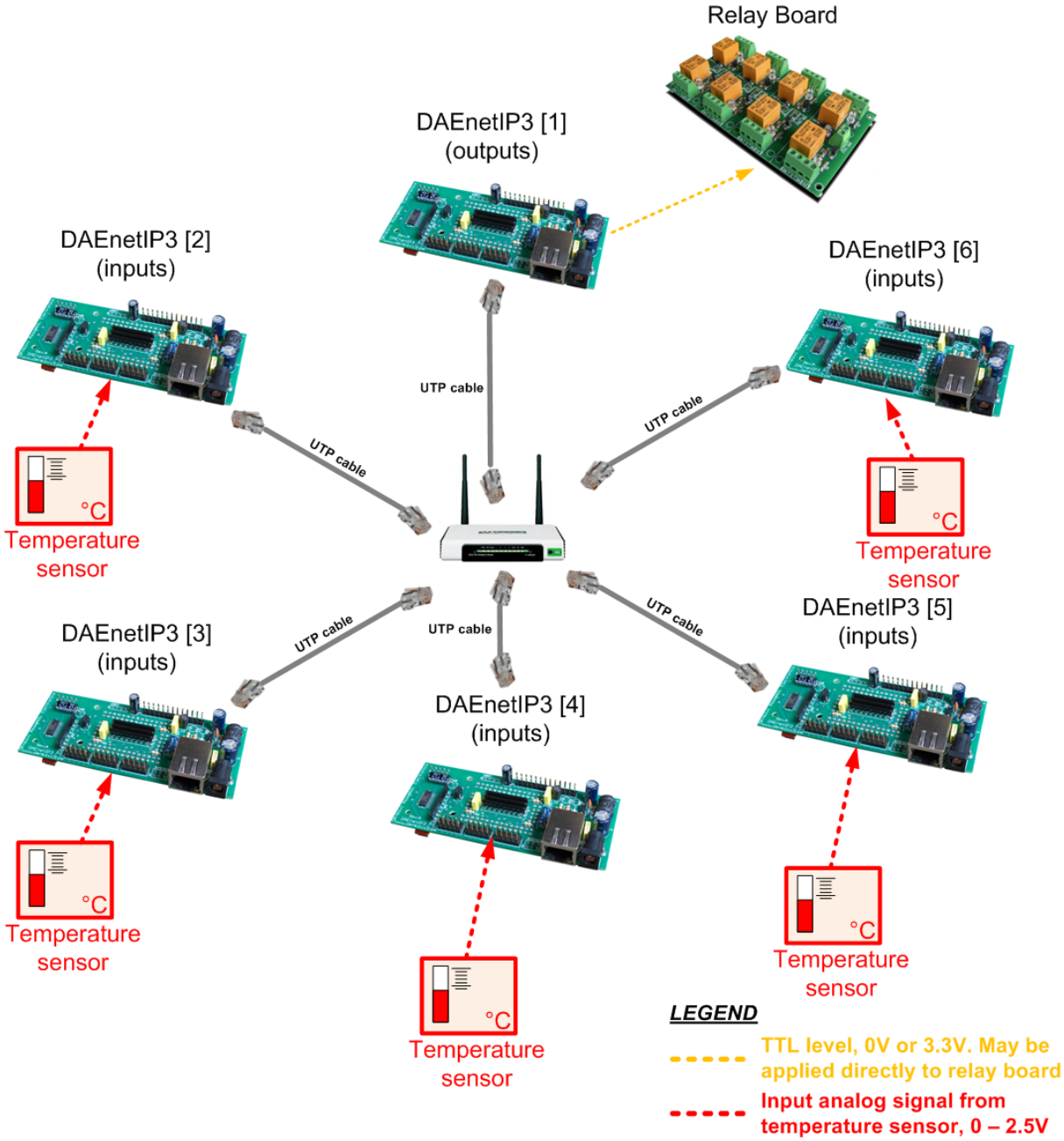

Figure 42. Configuration 5 to 1 over LAN

Table 12. Example 4 settings

DAEnetIP3 [1] (outputs) **Network Settings** Eth IP address = 192.168.1.100 Eth Mask = 255.255.255.0 Eth GW = 192.168.1.1 Local Port Range = 1005:1009 **Digital Output 1 (Port A - Pin 1)** Mode = On/Off setting and remote **Digital Output 2 (Port A - Pin 2)** Mode = On/Off setting and remote **Digital Output 1 (Port A - Pin 3)** Mode = On/Off setting and remote **Digital Output 2 (Port A - Pin 4)** Mode = On/Off setting and remote **Digital Output 1 (Port A - Pin 5)** Mode = On/Off setting and remote	***DAEnetIP3 [2] (inputs)*** **Network Settings** Eth IP address = 192.168.1.101 Eth Mask = 255.255.255.0 Eth GW a= 192.168.1.1 Remote Server IP:Port = 192.168.1.100:1005 Working mode = Ethernet 10/100 Mbit **Analog Input 1 (Port C – Pin 1)** Refresh=1, LT=100,HT=150,LH=10,HH=10, Mode = Low, PortA Pin = Pin 1, Remote = true
DAEnetIP3 [3] (inputs) **Network Settings** Eth IP address = 192.168.1.102 Eth Mask = 255.255.255.0 Eth GW a= 192.168.1.1 Remote Server IP:Port = 192.168.1.100:1006 Working mode = Ethernet 10/100 Mbit **Analog Input 1 (Port C – Pin 1)** Refresh=1, LT=100,HT=150,LH=10,HH=10, Mode = Low, PortA Pin = Pin 2, Remote = true	***DAEnetIP3 [4] (inputs)*** **Network Settings** Eth IP address = 192.168.1.103 Eth Mask = 255.255.255.0 Eth GW a= 192.168.1.1 Remote Server IP:Port = 192.168.1.100:1007 Working mode = Ethernet 10/100 Mbit **Analog Input 1 (Port C – Pin 1)** Refresh=1, LT=100,HT=150,LH=10,HH=10, Mode = Low, PortA Pin = Pin 3, Remote = true
DAEnetIP3 [5] (inputs) **Network Settings** Eth IP address = 192.168.1.104 Eth Mask = 255.255.255.0 Eth GW a= 192.168.1.1 Remote Server IP:Port = 192.168.1.100:1008 Working mode = Ethernet 10/100 Mbit **Analog Input 1 (Port C – Pin 1)** Refresh=1, LT=100,HT=150,LH=10,HH=10, Mode = Low, PortA Pin = Pin 4, Remote = true	***DAEnetIP3 [6] (inputs)*** **Network Settings** Eth IP address = 192.168.1.105 Eth Mask = 255.255.255.0 Eth GW a= 192.168.1.1 Remote Server IP:Port = 192.168.1.100:1009 Working mode = Ethernet 10/100 Mbit **Analog Input 1 (Port C – Pin 1)** Refresh=1, LT=100,HT=150,LH=10,HH=10, Mode = Low, PortA Pin = Pin 5, Remote = true
Router Settings IP address = 192.168.1.1	

10.4.5. Example 5: Configuration "5 to 1" over WLAN

This example (figure 43) is same as the previous one, but it is used Wi-Fi interface of all the DAEnetIP3 controllers.

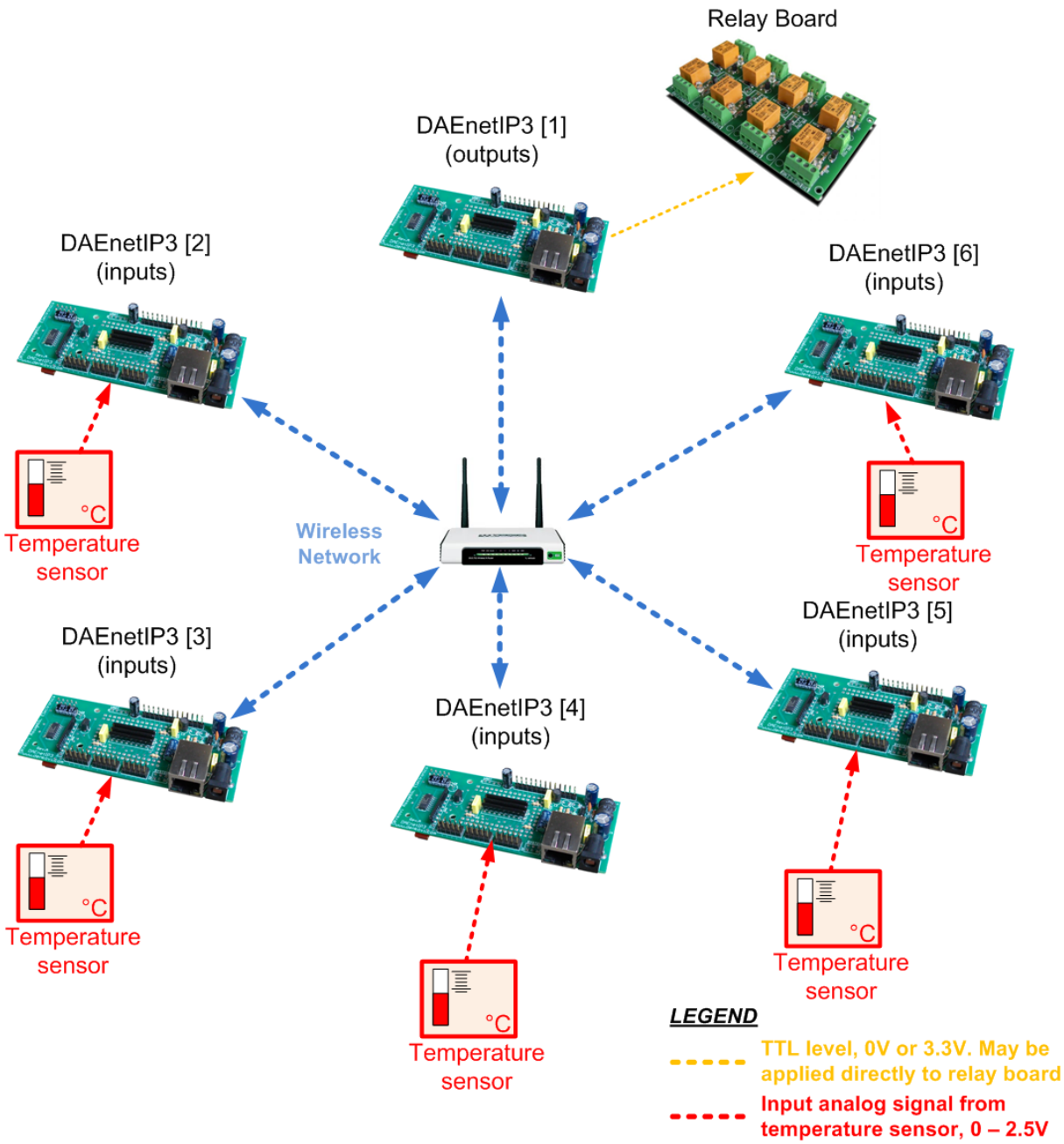

Figure 43. Distributed mode – example 4

Table 13. Example 5 settings

DAEnetIP3 [1] (outputs) **Network Settings** Wln IP address = 192.168.1.100 Wln Mask = 255.255.255.0 Wln GW = 192.168.1.1 Local Port Range = 1005:1009 **Digital Output 1 (Port A - Pin 1)** Mode = On/Off setting and remote **Digital Output 2 (Port A - Pin 2)** Mode = On/Off setting and remote **Digital Output 1 (Port A - Pin 3)** Mode = On/Off setting and remote **Digital Output 2 (Port A - Pin 4)** Mode = On/Off setting and remote **Digital Output 1 (Port A - Pin 5)** Mode = On/Off setting and remote **Wi-Fi Settings** WEP SSID = Network WEP Key = admin	***DAEnetIP3 [2] (inputs)*** **Network Settings** Wln IP address = 192.168.1.101 Wln Mask = 255.255.255.0 Wln GW a= 192.168.1.1 Remote Server IP:Port = 192.168.1.100:1005 Working mode = Wi-Fi 802.11 b/g **Analog Input 1 (Port C – Pin 1)** Refresh=1, LT=100,HT=150,LH=10,HH=10, Mode = Low, PortA Pin = Pin 1, Remote = true **Wi-Fi Settings** WEP SSID = Network WEP Key = admin
DAEnetIP3 [3] (inputs) **Network Settings** Wln IP address = 192.168.1.102 Wln Mask = 255.255.255.0 Wln GW a= 192.168.1.1 Remote Server IP:Port = 192.168.1.100:1006 Working mode = Wi-Fi 802.11 b/g **Analog Input 1 (Port C – Pin 1)** Refresh=1, LT=100,HT=150,LH=10,HH=10, Mode = Low, PortA Pin = Pin 2, Remote = true **Wi-Fi Settings** WEP SSID = Network WEP Key = admin	***DAEnetIP3 [4] (inputs)*** **Network Settings** Wln IP address = 192.168.1.103 Wln Mask = 255.255.255.0 Wln GW a= 192.168.1.1 Remote Server IP:Port = 192.168.1.100:1007 Working mode = Wi-Fi 802.11 b/g **Analog Input 1 (Port C – Pin 1)** Refresh=1, LT=100,HT=150,LH=10,HH=10, Mode = Low, PortA Pin = Pin 3, Remote = true **Wi-Fi Settings** WEP SSID = Network WEP Key = admin
DAEnetIP3 [5] (inputs) **Network Settings** Wln IP address = 192.168.1.104 Wln Mask = 255.255.255.0 Wln GW a= 192.168.1.1 Remote Server IP:Port = 192.168.1.100:1008 Working mode = Wi-Fi 802.11 b/g **Analog Input 1 (Port C – Pin 1)** Refresh=1, LT=100,HT=150,LH=10,HH=10, Mode = Low, PortA Pin = Pin 4, Remote = true **Wi-Fi Settings** WEP SSID = Network WEP Key = admin	***DAEnetIP3 [6] (inputs)*** **Network Settings** Wln IP address = 192.168.1.105 Wln Mask = 255.255.255.0 Wln GW a= 192.168.1.1 Remote Server IP:Port = 192.168.1.100:1009 Working mode = Wi-Fi 802.11 b/g **Analog Input 1 (Port C – Pin 1)** Refresh=1, LT=100,HT=150,LH=10,HH=10, Mode = Low, PortA Pin = Pin 5, Remote = true **Wi-Fi Settings** WEP SSID = Network WEP Key = admin
Router Settings IP address = 192.168.1.1 WEP SSID = Network WEP Key = admin	

10.4.6. Example 6: Mixed configuration

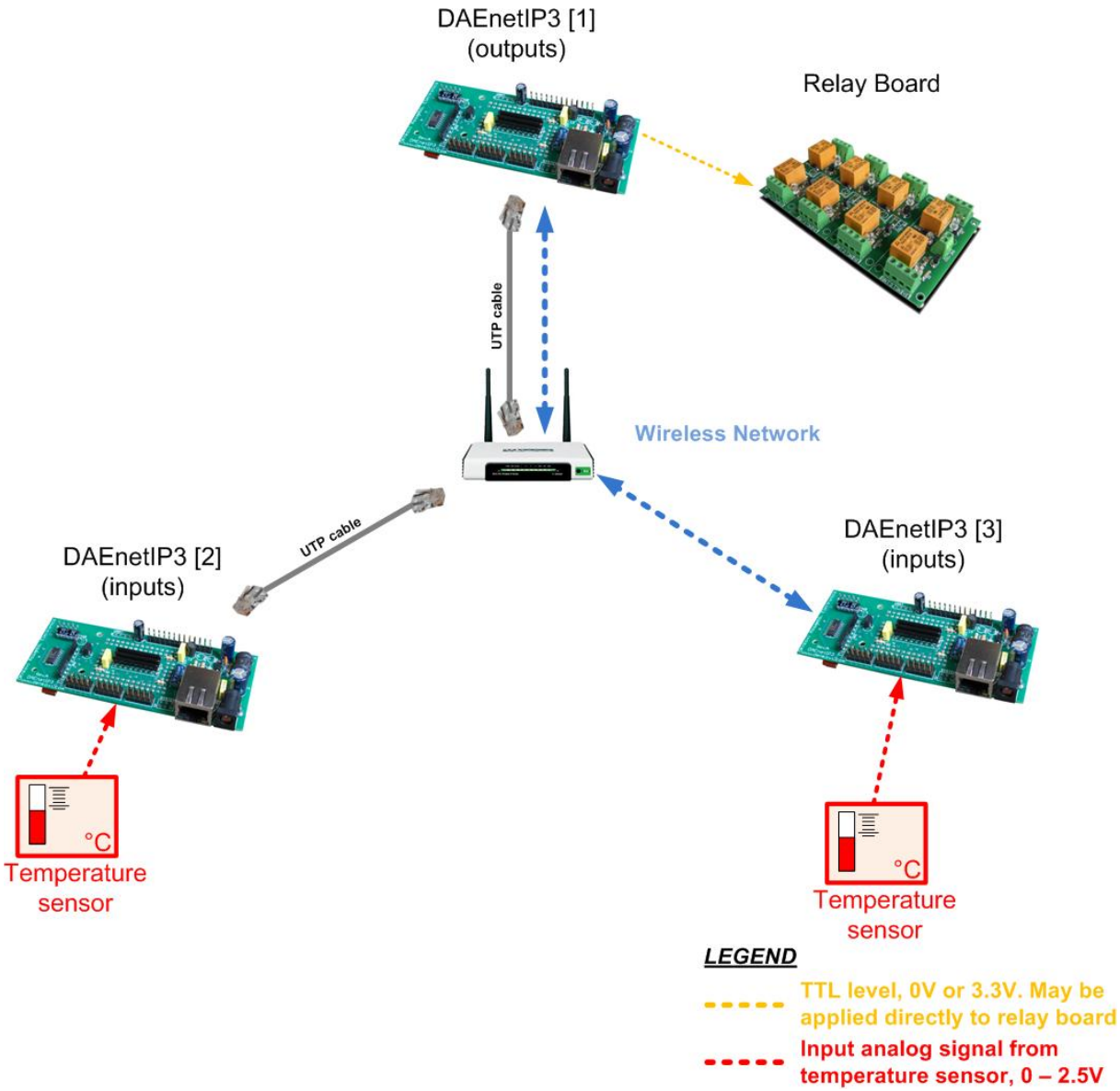

Figure 44. Mixed configuration

This example (figure 44) demonstrates how two client DAEnetIP3 (inputs) control one server (DAEnetIP3 with outputs). DAEnetIP3 [2] communicate over UTP cable and DAEnetIP3 [3] communicate over wireless network.

DAEnetIP3 [1] (the server) can handle the two types of messages (over the UTP cable and over the wireless). Its input sockets are configured so it accepts any incoming connections.

DAEnetIP3 [2] and DAEnetIP3 [3] however must be configured to work with their Ethernet and Wireless interfaces.

The router is the gateway for the LAN and WLAN networks. In this way DAEnetIP3 [1] and DAEnetIP3 [2] are in local area network and DAEnetIP3 [1] and DAEnetIP3 [3] are in another local area network (wireless local area network).

Table 14. Example 6 settings

DAEnetIP3 [1] (outputs) **Network Settings** Wln IP address = 192.168.1.20 Wln Mask = 255.255.255.0 Wln GW = 192.168.1.1 Eth IP address = 192.168.1.10 Eth Mask = 255.255.255.0 Eth GW = 192.168.1.1 Local Port Range = 1005:1009 **Digital Output 1 (Port A - Pin 1)** Mode = On/Off setting and remote **Digital Output 2 (Port A - Pin 2)** Mode = On/Off setting and remote **Wi-Fi Settings** WEP SSID = Network WEP Key = admin	***DAEnetIP3 [2] (inputs)*** **Network Settings** Wln IP address = 192.168.1.21 Wln Mask = 255.255.255.0 Wln GW = 192.168.1.1 Eth IP address = 192.168.1.11 Eth Mask = 255.255.255.0 Eth GW = 192.168.0.1 Remote Server IP:Port = 192.168.1.10:1005 Working mode = Ethernet 10/100 Mbit **Analog Input 1 (Port C – Pin 1)** Refresh=1, LT=100,HT=150,LH=10,HH=10, Mode = Low, PortA Pin = Pin 1, Remote = true **Wi-Fi Settings** WEP SSID = Network WEP Key = admin
DAEnetIP3 [3] (inputs) **Network Settings** Wln IP address = 192.168.1.22 Wln Mask = 255.255.255.0 Wln GW = 192.168.1.1 Eth IP address = 192.168.1.11 Eth Mask = 255.255.255.0 Eth GW = 192.168.1.1 Remote Server IP:Port = 192.168.1.10:1006 Working mode = Wi-Fi 802.11 b/g **Analog Input 1 (Port C – Pin 1)** Refresh=1, LT=100,HT=150,LH=10,HH=10, Mode = Low, PortA Pin = Pin 2, Remote = true **Wi-Fi Settings** WEP SSID = Network WEP Key = admin	***Router Settings*** IP address = 192.168.1.1 WEP SSID = Network WEP Key = admin

10.4.7. Example 7: Ring configuration over WLAN

This example (figure 45) demonstrates how a simple ring configuration with 4 DAEnetIP3 modules can be developed. Each DAEnetIP3 control the next and it is controlled by the previous one. For example DAEnetIP3 [1] control DAEnetIP3 [2] and it is controlled by DAEnetIP3 [4]. Each module works as server/client at the same time. There is no limit of adding modules to this network, because each module has only one input socket reserved.

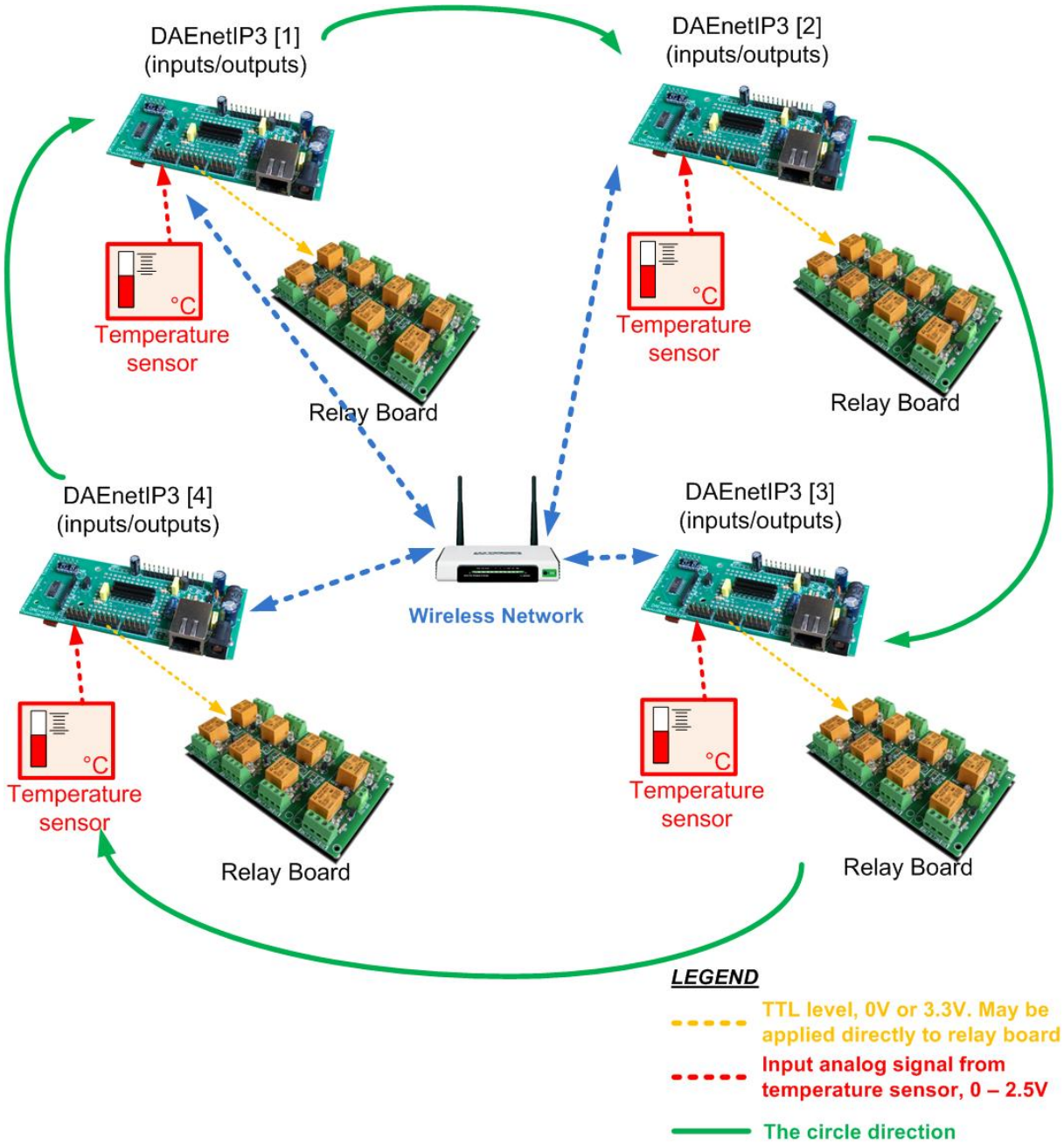

Figure 45. Ring configuration

Table 15. Example 7 settings

DAEnetIP3 [1] (inputs/outputs) **Network Settings** Wln IP address = 192.168.1.100 Wln Mask = 255.255.255.0 Wln GW = 192.168.1.1 Local Port Range = 1005:1009 Remote Server IP:Port = 192.168.1.101:1005 Working mode = Wi-Fi 802.11 b/g **Digital Output 1 (Port A - Pin 1)** Mode = On/Off setting and remote **Analog Input 1 (Port C – Pin 1)** Refresh=1, LT=100,HT=150,LH=10,HH=10, Mode = Low, PortA Pin = Pin 1, Remote = true **Wi-Fi Settings** WEP SSID = Network WEP Key = admin	***DAEnetIP3 [2] (inputs/outputs)*** **Network Settings** Wln IP address = 192.168.1.101 Wln Mask = 255.255.255.0 Wln GW = 192.168.1.1 Local Port Range = 1005:1009 Remote Server IP:Port = 192.168.1.102:1005 Working mode = Wi-Fi 802.11 b/g **Digital Output 1 (Port A - Pin 1)** Mode = On/Off setting and remote **Analog Input 1 (Port C – Pin 1)** Refresh=1, LT=100,HT=150,LH=10,HH=10, Mode = Low, PortA Pin = Pin 1, Remote = true **Wi-Fi Settings** WEP SSID = Network WEP Key = admin
DAEnetIP3 [4] (inputs/outputs) **Network Settings** Wln IP address = 192.168.1.103 Wln Mask = 255.255.255.0 Wln GW = 192.168.1.1 Local Port Range = 1005:1009 Remote Server IP:Port = 192.168.1.100:1005 Working mode = Wi-Fi 802.11 b/g **Digital Output 1 (Port A - Pin 1)** Mode = On/Off setting and remote **Analog Input 1 (Port C – Pin 1)** Refresh=1, LT=100,HT=150,LH=10,HH=10, Mode = Low, PortA Pin = Pin 1, Remote = true **Wi-Fi Settings** WEP SSID = Network WEP Key = admin	***DAEnetIP3 [3] (inputs/outputs)*** **Network Settings** Wln IP address = 192.168.1.102 Wln Mask = 255.255.255.0 Wln GW = 192.168.1.1 Local Port Range = 1005:1009 Remote Server IP:Port = 192.168.1.103:1005 Working mode = Wi-Fi 802.11 b/g **Digital Output 1 (Port A - Pin 1)** Mode = On/Off setting and remote **Analog Input 1 (Port C – Pin 1)** Refresh=1, LT=100,HT=150,LH=10,HH=10, Mode = Low, PortA Pin = Pin 1, Remote = true3, Remote = true **Wi-Fi Settings** WEP SSID = Network WEP Key = admin
Router Settings IP address = 192.168.1.1 WEP SSID = Network WEP Key = admin	

10.4.8. Custom examples

Of course the above examples are only small part of what configurations can be done. It is possible to combine them, to add or remove controllers and so on. It must be only kept some rules regarding the distributed mode:

- Distributed network with DAEnetIP3 controllers are for slow processes (temperature measuring and setting relays for instance). It is not recommend to connect for example 1 kHz generator to some digital input and expect to toggle some relay over the network.
- Note that each DAEnetIP3 controller usually has two interfaces – Wireless and Ethernet. They must be set properly depending on the network that the DAEnetIP3 controllers are used.
- The incoming sockets (for controlled DAEnetIP3 modules) accepts connections over LAN and WLAN.
- The outgoing connections (for controlling DAEnetIP3 modules) can be established either via LAN either via WLAN. This must be set with ***Working Mode*** parameter.
- It is not recommend using distributed mode over the WAN (Internet). The communication is not secured and there may be some significant latency.

11. RC4 Encryption

Communication via TCP/IP socket with DAEnetIP3 controller may be encrypted with RC4 algorithm.

- The RC4 encryption may be activated/deactivated by the user anytime
- The RC4 encryption is used for protection the TCP/IP socket communication.
- The RC4 is not used for Telnet and distributed mode (Box-to-box mode) and HTTP API.
- To communicate properly two nodes with RC4 (for example PC and DAEnetIP3) they must have the same RC4 passwords, or the RC4 must be disabled at all.
- RC4 algorithm (if enabled) from client side is responsibility of the user software.

Below are shown two situations where the RC4 is enabled. The first (figure 46) is “normal conversation” (the both sides have the same passwords). The second (figure 47) is “bad conversation” (the sides have different RC4 passwords).

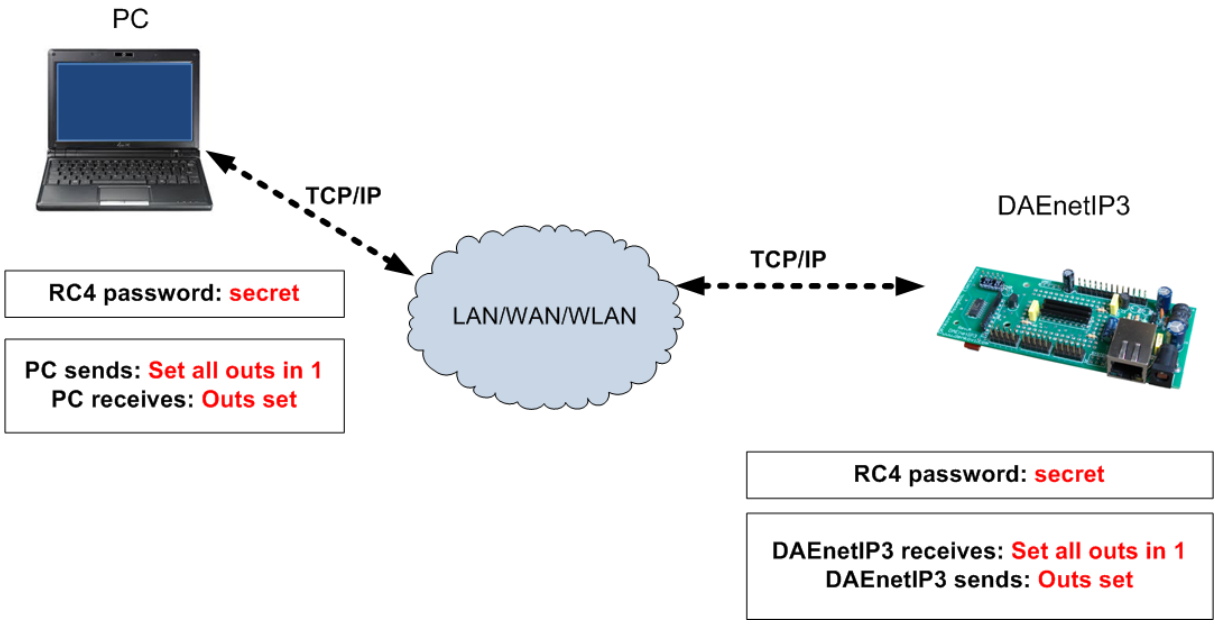

Figure 46. RC4 normal conversation

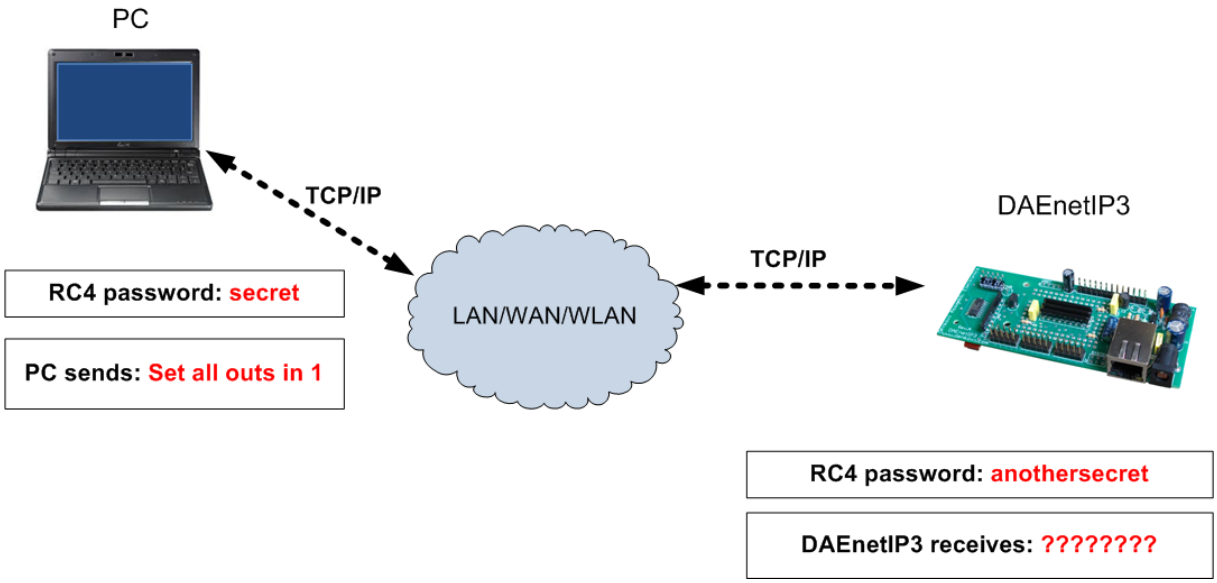

Figure 137. RC4 bad conversation

From web RC4 can be enabled/disabled in the following way:
Web: Admin -> Enable RC4 encoding

From web RC4 password can adjusted in the following way:
Web: Admin -> RC4 password

A good online tool for RC4 calculation is:
http://www.fyneworks.com/encryption/rc4-encryption/

12. UART (Serial Port)

12.1. Overview

DAEnetIP3 has one built-in UART (Universal asynchronous receiver transmitter). It is shown on figure 48.

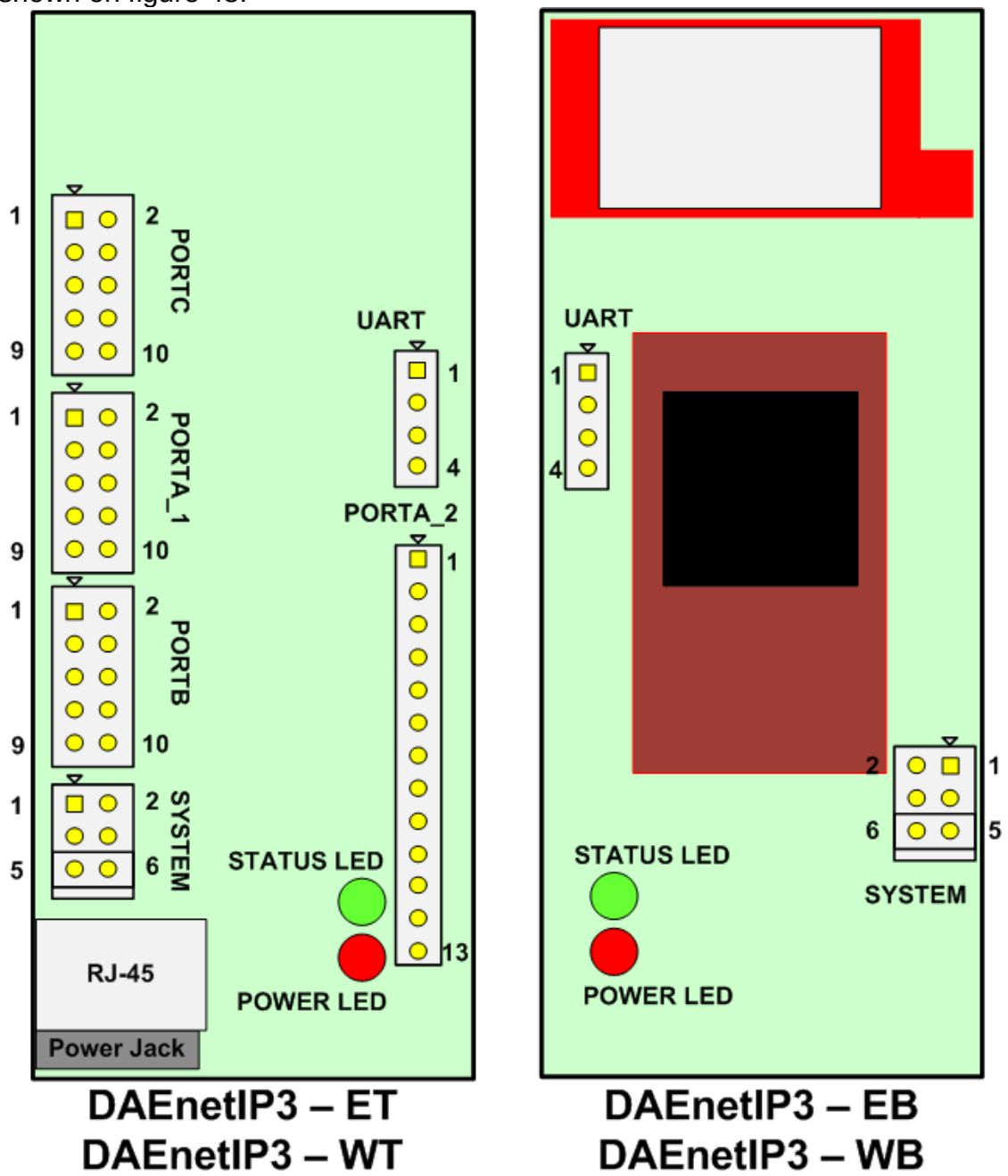

Figure 48. DAEnetIP3 UART port

The UART port lines are:

- Tx – output. This is the transmission UART line.
- Rx – input. This is the receiving UART line.
- Dir – output. This is the RS485 direction line.
- Gnd. This is ground.

12.2. Applications

The main purpose of the UART is creating RS485 network accessed over single IP (figure 49). Each DAEnetIP3 has serial address from 0 up to 254 (00-FE). The address 255 (FF) is reserved for emergency situations. For RS485 network it must be used UART<->RS485 converter (for example SN75176B).

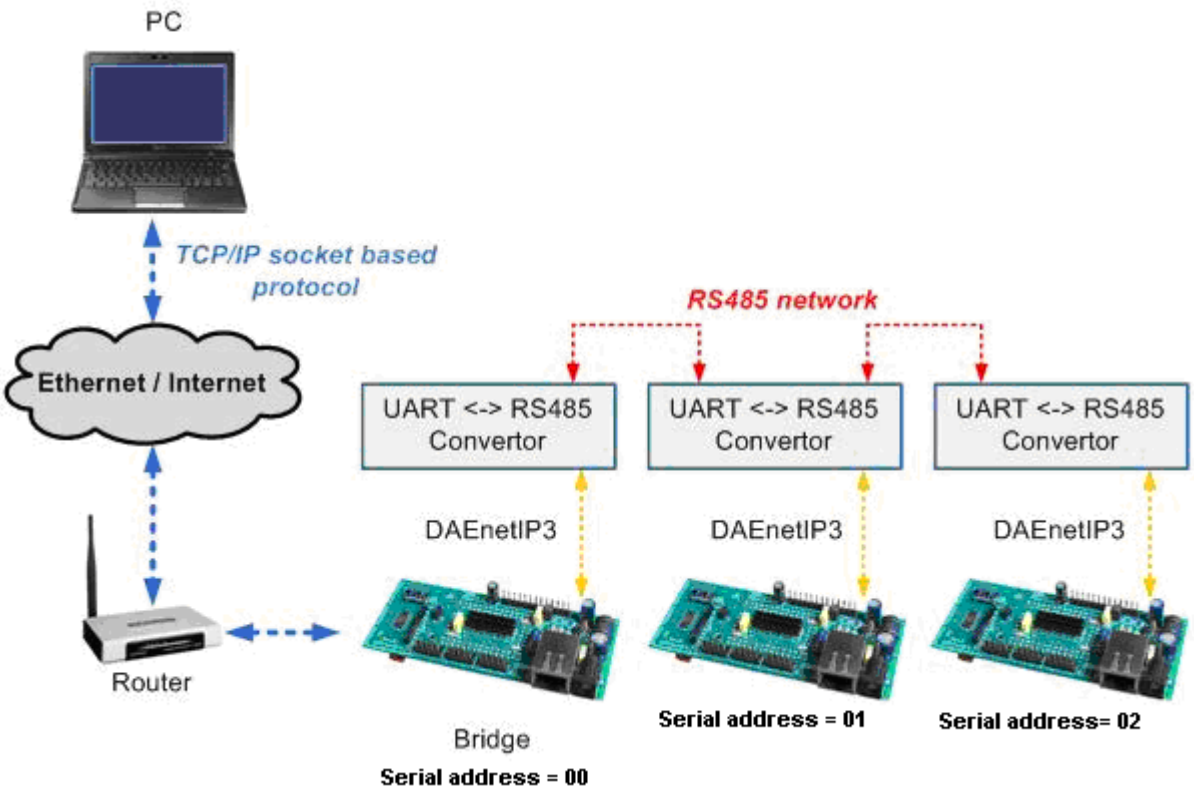

Figure 49. RS485 network with many DAEnetIP3.

Each DAEnetIP3 can be accessed over TCP/IP socket. This may be done over WAN/LAN/WLAN. This controller is used to be said **TCP/IP<->serial bridge**. When TCP/IP packet is received then it is checked if it is valid command and if the serial address is the same and if yes then executes the command. In all cases the data which has come in the TCP/IP socket is retransmitted out to the UART port. Then (over RS485 usually) the data (command) is propagated to the rest DAEnetIP3 controllers in this serial network.

It is true the opposite – when data is coming in to the UART port, it is decoded (eventually) and resend to the TCP/IP socket (if there is established TCP/IP connection or not).

Of course UART port may be used not only with UART<->RS485 converters, but with UART<->RS232 (MAX232), UART<->USB (FT232) and other UART converters.

12.3. UART (Serial Port) web server page

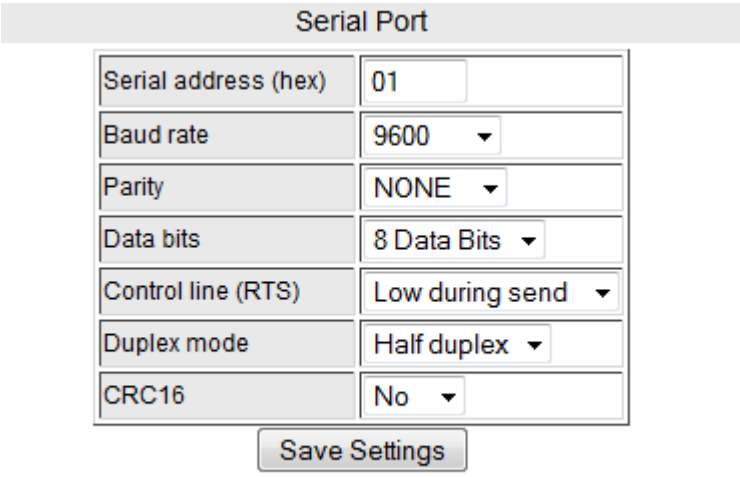

Figure 50. Setup page for UART (Serial Port)

12.4. Configuration

Bellow are described the UART:

- **Serial address.** It may be from 00_{hex} to FE_{hex} (0_{dec} – 254_{dec}). This is the serial address of the controller in the serial network. The controller will respond on command that is only with its serial address. There shouldn't be duplicate serial addresses. The serial address FF is reserved and it can not be assigned to any DAEnetIP3 controller.
- **Baud rate.** It may be 300, 600, 1200, 2400, 4800, 9600, 14400, 19200, 38400, 56000, 57600, 115200, 128000 or 256000.
- **Parity.** May be None,Even,Mark,Odd,Space.
- **Data bits.** 7 or 8.
- **Control line.** This is if the line is low during send or high during send.
- **Duplex mode.** Half-duplex (suitable for RS485) or Full-duplex.
- **CRC16.** If this parameter is enabled, then DAEnetIP3 UART port will sends (checks during receiving) CRC16 checksum of the data, appended to the end of the data and before the delimiter ";". If this parameter is not enabled, then DAEnetIP3 will not sends (checks during receiving) CRC16 checksum.

13. UART <-> TCP/IP bridge

DAEnetIP3 works as serial bridge between serial network (UART) and TCP/IP network. The algorithm for this bridge is based on several rules:

- When DAEnetIP3 receives command PDU from TCP/IP socket (decrypting or not decrypting RC4), it retransmits always the data over the serial network (with or without CRC16). If the address of the received command is the same, then DAEnetIP3 executes the command and sends the response (or error) only over the TCP/IP (encrypting or not encrypting the RC4), because this is the way that the command came from.

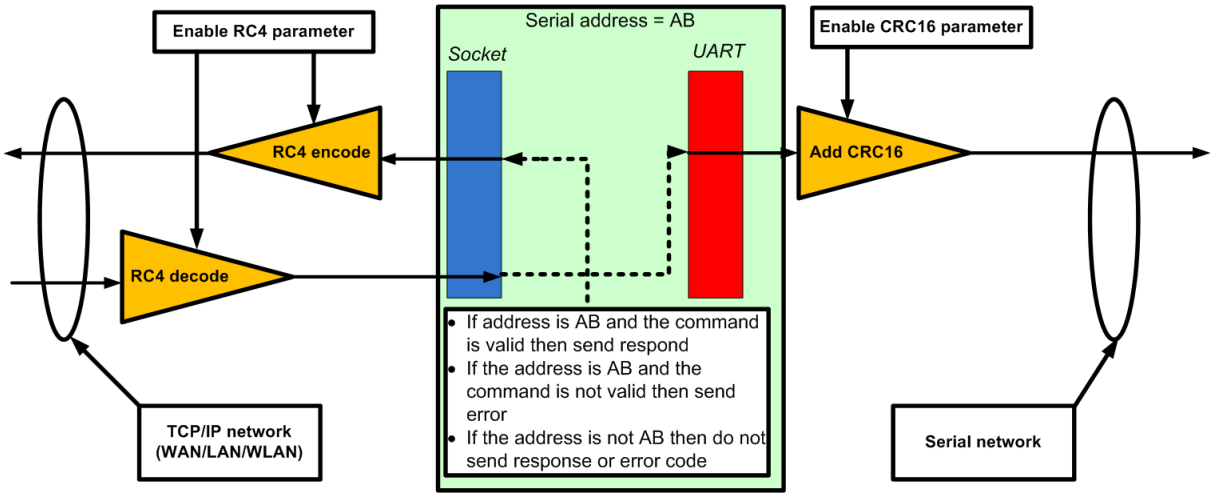

Figure 51. Receiving command over TCP/IP network

- When DAEnetIP3 receives command PDU over the serial network, it checks or doesn't check the CRC16 checksum, retransmits always the data over the TCP/IP (encrypting or not encrypting the RC4). If the command address was the same, the controller executes the command and sends respond (error code) over the serial line (with or without CRC16).

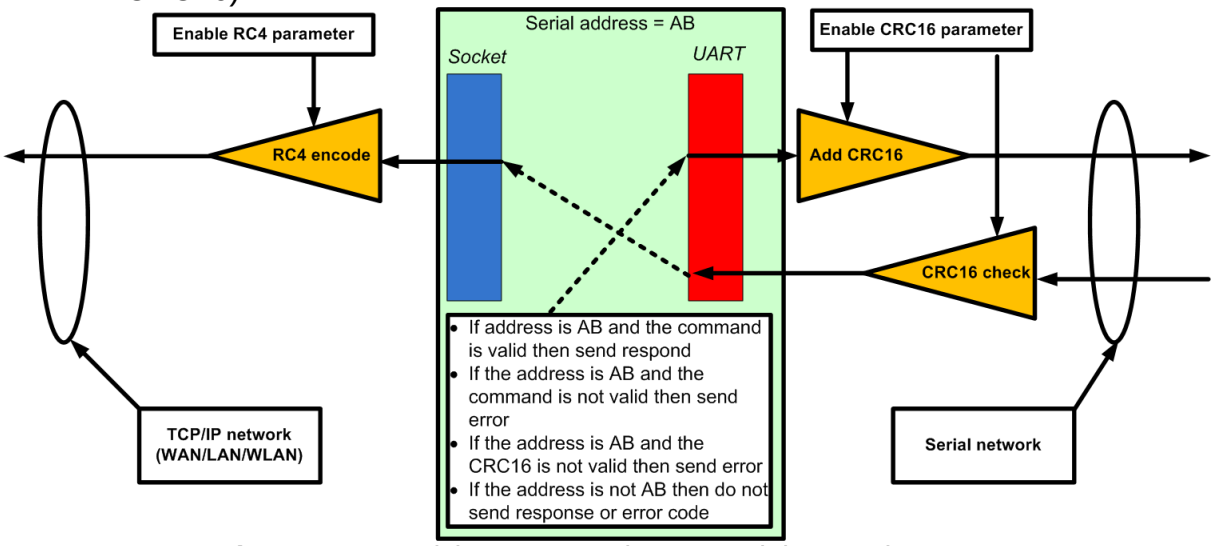

Figure 52. Receiving commands over serial network.

14. Real Time Clock (RTC)

14.1. RTC Web page

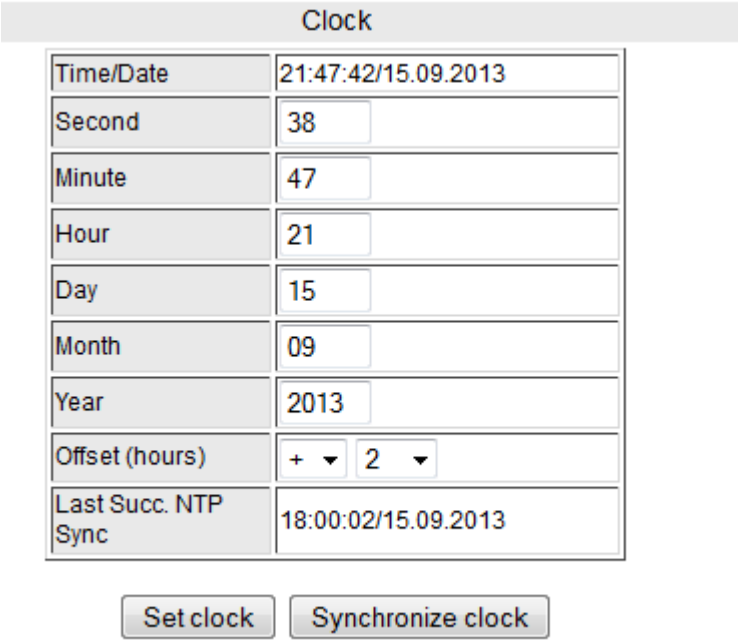

Figure 53. RTC settings

- Set clock - Set the RTC with the given date and time. The date and time must be valid. The **Year** may be from 2000 up to 2099.
- Synchronize clock - DAEnetIP3 will synchronize the RTC with the given NTP server from the administration settings page. If there is no connection with the NTP server, the controller will keep the old time.
- Offset - determines the offset in hours applied to the date/time when it is synchronizing via NTP
- Last successful NTP synchronization (read only) - shows when was the previous successful synchronization from NTP server

14.2. Auto-synchronization from NTP

The controller supports auto-synchronization from NTP server automatically. When this option is enabled (*Web: Admin -> Allow NTP auto-sync.),* the controller synchronizes its RTC at 00:00, 06:00, 12:00 and 18:00 o'clock.

The NTP server can be adjusted from web in the following way:

Web: Admin -> NTP Server IP : Remote Port

15. E-mail notifications

From version 2.0.0 DAEnetIP3 supports E-mail (SMTP) notifications based on several possible events. There are several parameters which must be adjusted correctly to work with SMTP. These are:

- E-mail server : port (*Web: Admin -> E-mail server : port)*
- E-mail receiver (*Web: Admin -> E-mail receiver)*
- E-mail sender (*Web: Admin -> E-mail sender)*
- E-mail username (*Web: Admin -> E-mail username)*
- E-mail password (*Web: Admin -> E-mail password)*

The events which can generate E-mail notifications are:

- On-boot event - the controller sends E-mail when it is booted. This is useful to know if there was power off of the power supply.
- Keep-alive event - this E-mail may be sent during some interval (from 1 min to 99 min).
- AI event - this event is generated regarding the analog inputs events (chapter 9)
- DI event - this event is generated regarding the digital inputs events (chapter 8)
- NTP event - this event is generated when the controller tries to synchronize its clock. The E-mail contains information if the synchronization was successful or not.

Note: If there are more than one event generated at a time, it will be sent only the first one. The controller needs time to prepare and send email. This sometimes can be several seconds. If there is another event (request for E-mail sending) during this time, it won't be sent. There is not queue of events.

16. Wi-Fi 802.11 interface

DAEnetIP3 has WiFi interface (optionally). The controller can work as a client only (it can not create Hot Spot) but it can be only associated to Wi-Fi network.

On figure 54 it is shown Wi-Fi settings page. Note that to take effect changing the settings, the DAEnetIP3 controller must be rebooted.

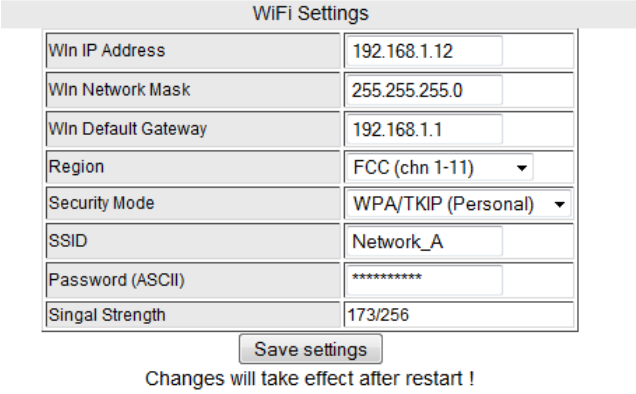

Figure 54. Wi-Fi settings.

- Wln IP address - The IP address of the module. This address is for the wireless interface.
- Wln Network Mask - The mask of the module. This mask is for the wireless interface.
- Wln Default Gateway - The default gateway of the module. This gateway is for the wireless interface.
- Region - The region that is located the DAEnetIP3 controller.
  - FCC (chn 1-11) - FCC domain (US, Canada, Taiwan...). Allowed channels: 1-11.
  - EU (chn 1-13) - European Union. Allowed channels: 1-13.
  - JAPAN (chn 1-14) - Japan. Allowed channels: 1-14.
  - Other (chn 1-14) - All other countries. Allowed channels: 1-14.
- Security Mode:
  - WEP 64
  - WEP 128
  - WPA/TKIP (Personal)
  - WPA2/AES (Personal)
- SSID - The name of the wireless network that the controller must be connected to.
- Password - WEP or WPA password
- Signal strength - indicates if the controller is associated to the wireless network and if yes, the signal level (from 0 up to 256 units).

Note also that when the controller security mode is changed to WPA or WPA2, it needs about 2 minutes to calculate the preshared key. During this calculation, it is stuck.

17. DAEnetIP3 data application protocol

DAEnetIP3 has several options for access (besides over Web browser). These are TCP/IP protocol, UART (Serial) protocol, Telnet, Virtual Serial Port and HTTP API. Each of these four ways uses **just one ASCII protocol** with small modifications. This means the core of this protocol (the commands/answers/errors) are the same. These PDU (protocol data units) are shown on figure 55.

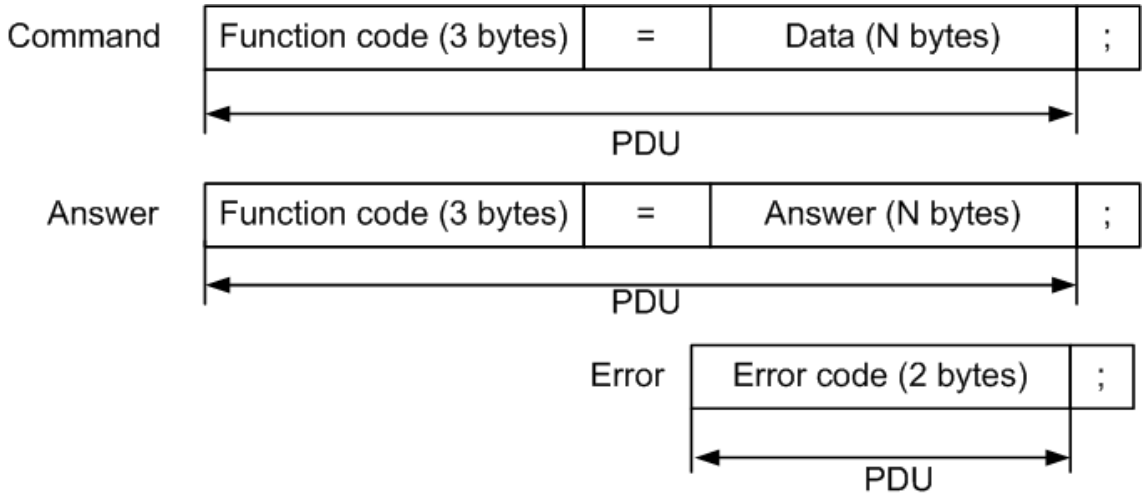

Figure 55. DAEnetIP3 data application protocol

The Command PDU is combination of function code (3 bytes), the char "=" and data (N bytes). The answer PDU begins with function code (3 bytes), the char "=" and the answer data (N bytes). The error PDU is the error code (2 bytes). The command, answer and error finish with the char ";". This is delimiter and it is forbidden char – it is not used in the protocol.

DAEnetIP3 data application protocol is fully ASCII. This means in the protocol exchange data consists of only printable characters.

For example the command received/sent is 01ASG=1111EC86;. This command sets the 16 bit digital output port in state 1111 (0001000100010001). DO 0,4,8,12 are in logical 1, end the rest are in logical 0. Then:

- 01 is the address which consists of two chars – '0' and '1'. It is hex number represented with chars. The maximum may be 'F' and 'E'.
- ASG=1111 is the command PDU. 1111 is hex number represented with chars that is the states of the whole digital outputs. The number may be from 0000 ('0' '0' '0' '0') up to FFFF ('F' 'F' 'F' 'F').
- EC86 is the CRC16 checksum. Its also hex number represented with chars. It's the check sum of 01ASG=1111.
- ";" is char that is the delimiter.

The reason for this is that the controller protocol is more understandable if it works with simple ASCII protocol.

Bellow ***char*** also may be mentioned as ***byte.***

17.1. TCP/IP socket based protocol

DAEnetIP3 controller has possibility for access via TCP/IP protocol. The user may connect with custom software to port that is defined for socket based TCP/IP communication. This port is called ***User Socket Port***.

The communication message format (ADU - application data units) over TCP/IP socket is shown on figure 56. It is added serial address to the command, answer and error messages. The idea is that in this way the user can access over TCP/IP protocol not only the server DAEnetIP3 module, but all the modules connected over the serial network to this DAEnetIP3 controller. These controllers are distinguished by the Address field (2 bytes), which is actually the serial address.

The idea is shown on figure 57. The user connects to DAEnetIP3 with serial address 00, but he can communicate with DAEnetIP3 [serial address = 01] and DAEnetIP3 [serial address 02]. DAEnetIP3 [serial address=00] is actually bridge between TCP/IP network and serial network. When data comes in to DAEnetIP3 [serial address 00] to ***User Socket Port,*** it checks if the address is 00. If yes it decodes the command and executes it or returns error code. In both case it resends the TCP/IP packet data to the serial network. If the address (in this example) is 01 or 02, then DAEnetIP3 [serial address 00] just pass the TCP/IP packet data through the serial network and DAEnetIP3 [serial address 01 or 02] decodes the command executes it and returns answer or error again over the serial network. After that DAEnetIP3 [serial address 00] takes this serial data and sends it over the TCP/IP network.

In this way the user is able to access many serially connected DAEnetIP3 controllers over the WAN/LAN/WLAN only via one IP address with the denkovi protocol.

The serial address FF is reserved and all DAEnetIP3 controllers accept commands with this address but sends respond with its own address.

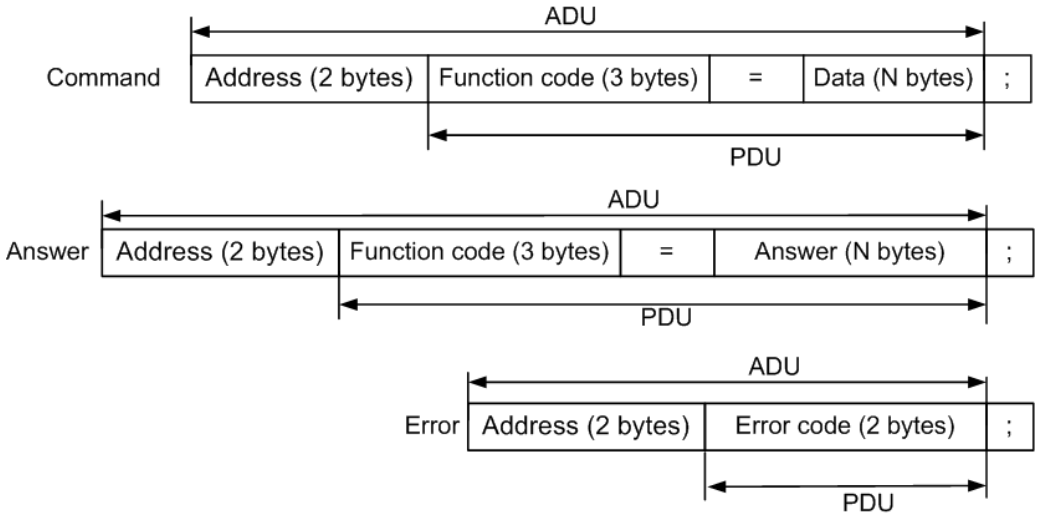

Figure 56. TCP/IP socket based application protocol

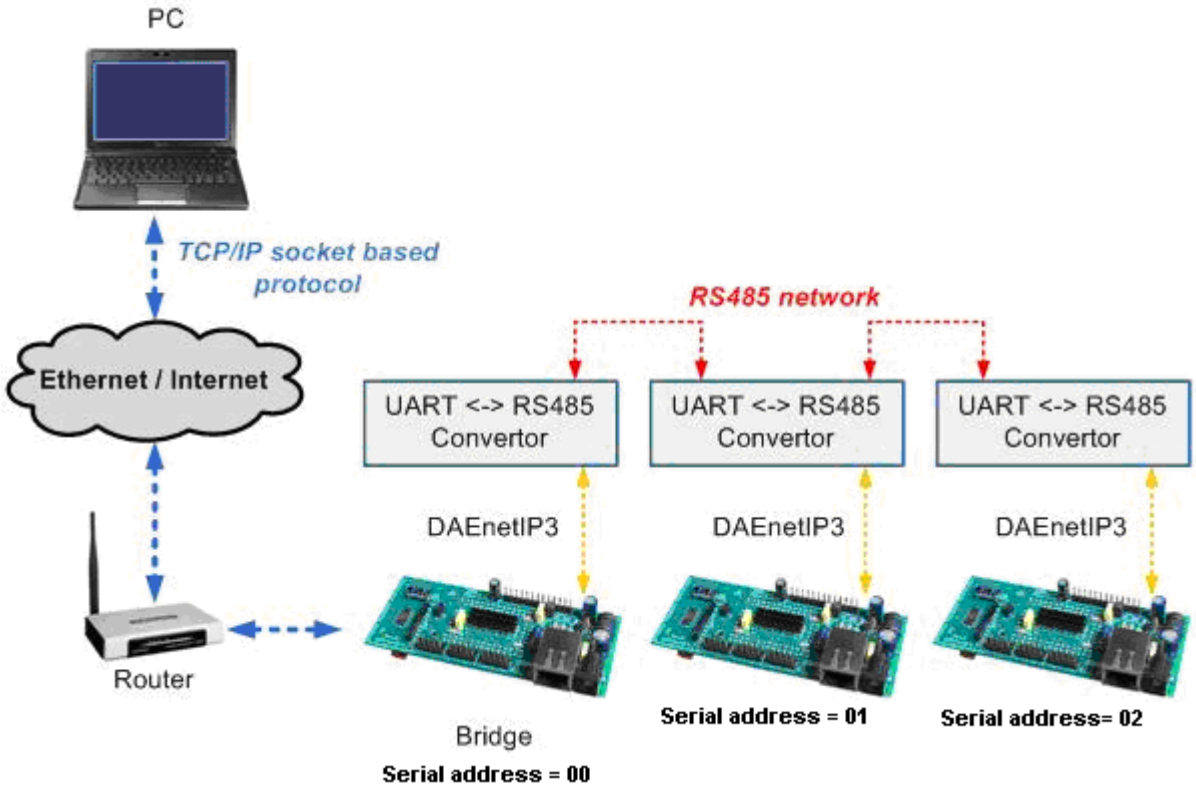

Figure 57. DAEnetIP3 can work as a bridge between TCP/IP network and serial network

Example commands (referring to Figure 57):

- RC4 OFF, CRC16 OFF

send: 00ASG=?; (gets the whole PortA status of DAEnetIP3[00])
receive: 00ASG=0F0F;

send: 01ASG=FFFF; (sets the whole PortA in 1 of DAEnetIP3[01])
receive: 01ASG=FFFF;

send: 02ASG=0000; (gets the whole PortA in 0 of DAEnetIP3[02])
receive: 02ASG=0000;

- RC4 ON (pass is "admin"), CRC16 OFF

send: bytes [09 76 41 78 7B 88 76 D1] (gets the whole PortA status of DAEnetIP3[00])
receive: bytes [09 76 41 78 7B 88 79 AC 60 57 08]

send: bytes [09 77 41 78 7B 88 0F AC 16 57 08] (sets the whole PortA in 1 of DAEnetIP3[01])
receive: bytes[09 77 41 78 7B 88 0F AC 16 57 08]

send: bytes [09 74 41 78 7B 88 79 DA 60 21 08] (gets the whole PortA in 0 of DAEnetIP3[02])
receive: bytes [09 74 41 78 7B 88 79 DA 60 21 08]

- RC4 OFF, CRC16 ON

send: 00ASG=?; (gets the whole PortA status of DAEnetIP3[00])

*receive: 00ASG=0F0F**959B**;*

send: 01ASG=FFFF; (sets the whole PortA in 1 of DAEnetIP3[01])
*receive: 01ASG=FFFF**2DAA**;*

send: 02ASG=0000; (gets the whole PortA in 0 of DAEnetIP3[02])
*receive: 02ASG=0000**C9E2**;*

- RC4 ON (pass is "admin"), CRC16 ON

send: bytes [09 76 41 78 7B 88 76 D1] (gets the whole PortA status of DAEnetIP3[00])
receive: bytes [09 76 41 78 7B 88 79 AC 60 57 0A EF 71 74 BF]

send: bytes [09 77 41 78 7B 88 0F AC 16 57 08] (sets the whole PortA in 1 of DAEnetIP3[01])
receive: bytes [09 77 41 78 7B 88 0F AC 16 57 01 9E 09 77 BF];

send: bytes [09 74 41 78 7B 88 79 DA 60 21 08] (gets the whole PortA in 0 of DAEnetIP3[02])
receive: bytes [09 74 41 78 7B 88 79 DA 60 21 70 E3 0D 04 BF]

17.2. Telnet protocol

The communication over Telnet is based on the command PDU, answer and error codes. Here the user can access only one DAEnetIP3 controller (only the server which is made the telnet connection to). The port for Telnet is constant - 23.

Telnet command, answer and error ADU (application data unit) are shown on figure 58.

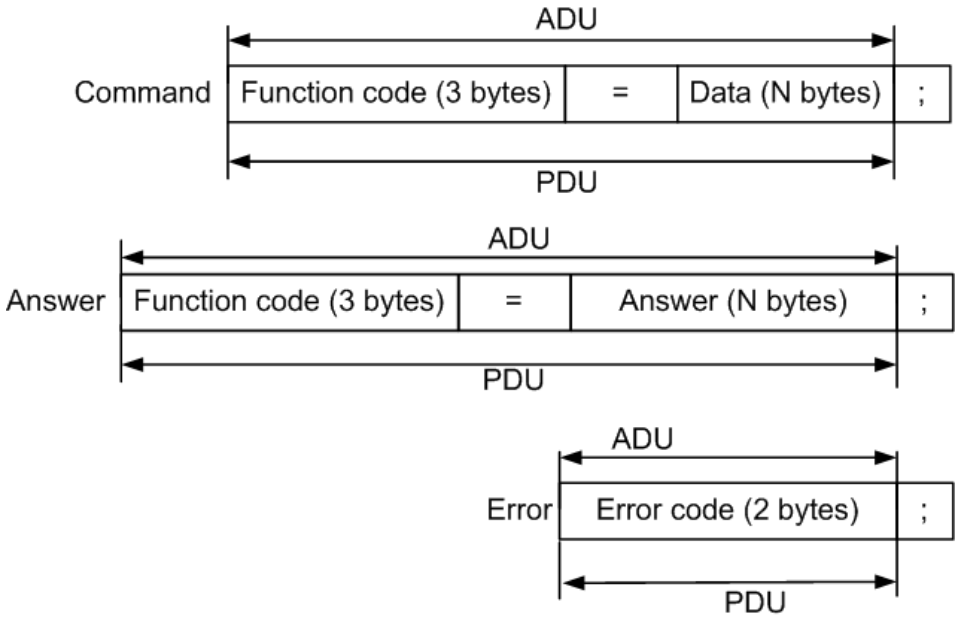

Figure 58. Telnet protocol

Example commands:

Figure 59. Telnet from Windows

From web Telnet can be enabled/disabled in the following way:
Web: Admin -> Enable Telnet

From web telnet password can be adjusted in the following way:
Web: Admin -> Telnet Password

17.3. Serial protocol

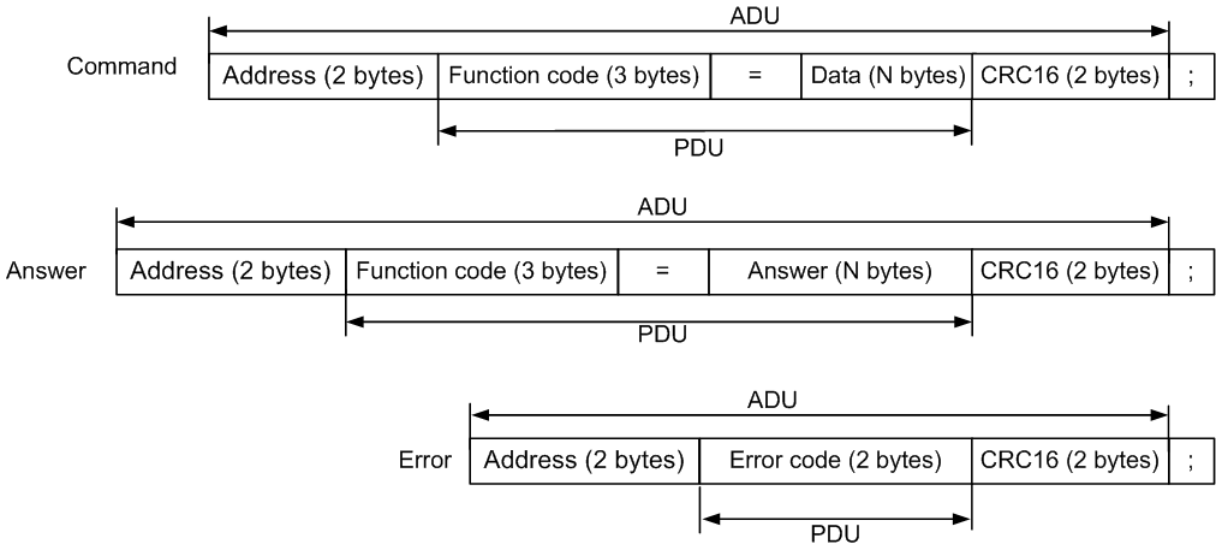

Figure 60. Communication via serial protocol

The communication over serial port is shown on figure 60. To each PDU it are added 2 bytes serial address at the beginning and 2 bytes CRC16 before the ";" char. The CRC16 bytes are actually checksum calculated with ***Modbus CRC16 algorithm***. The check sum is performed over all previous bytes (without ";")

Example commands (referring to Figure 60):

- CRC16 OFF

send: 00ASG=?; (gets the whole PortA status of DAEnetIP3[00])
receive: 00ASG=0F0F;

send: 01ASG=FFFF; (sets the whole PortA in 1 of DAEnetIP3[01])
receive: 01ASG=FFFF;

send: 02ASG=0000; (gets the whole PortA in 0 of DAEnetIP3[02])
receive: 02ASG=0000;

- CRC16 ON

*send: 00ASG=?**2DE3**; (gets the whole PortA status of DAEnetIP3[00])*
*receive: 00ASG=0F0F**959B**;*

*send: 01ASG=FFFF**2DAA**; (sets the whole PortA in 1 of DAEnetIP3[01])*
*receive: 01ASG=FFFF**2DAA**;*

*send: 02ASG=0000**C9E2**; (gets the whole PortA in 0 of DAEnetIP3[02])*
*receive: 02ASG=0000**C9E2**;*

17.4. Virtual Serial Port

This communication way is almost the same like TCP/IP. The data transfer is done also via same TCP/IP network and user defined port. The only difference is that

all the communication is done by the Windows Virtual Serial Port driver and in this way the user is able to communicate with DAEnetIP3 via regular COM port.

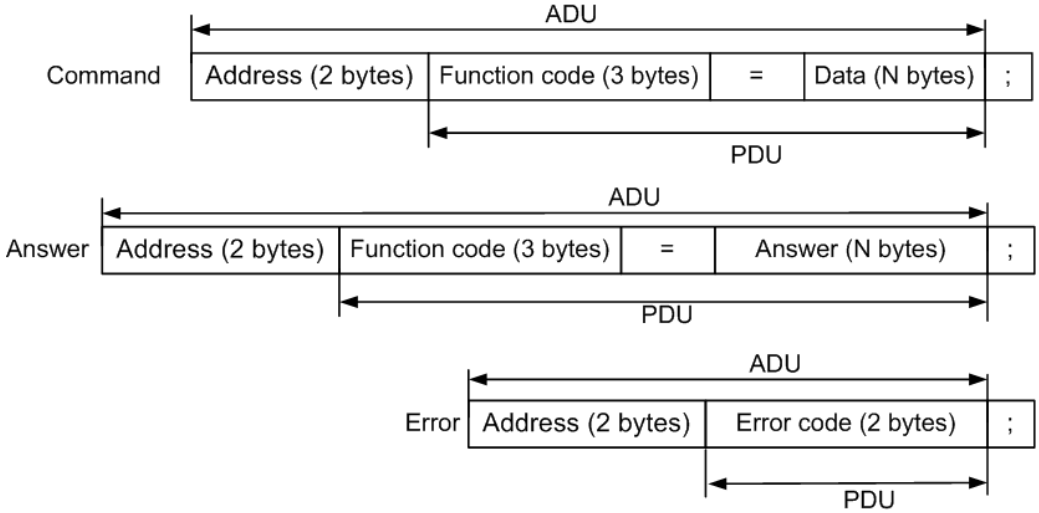

Figure 61. Communication via Virtual Serial Port

17.5. HTTP API commands

This communication way is preferred very often because it is easy to be used for integration.

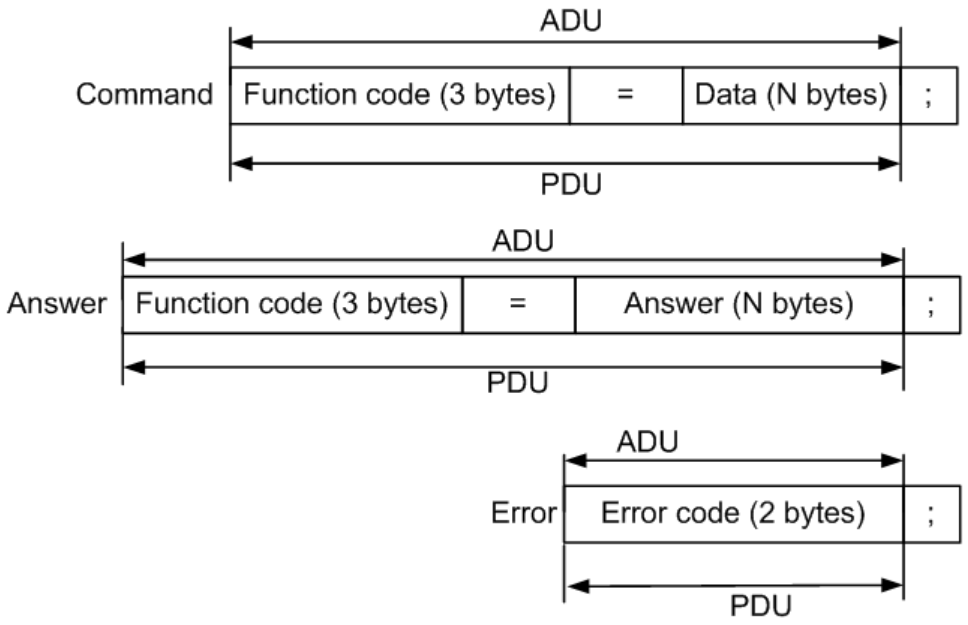

Figure 62. Communication with HTTP API commands

Bellow are shown example commands. Please note that there is HTTP API password (by default it is admin) to prevent unauthorized access:

Example commands:

*send: http://your.ip.address/command.html?**P=admin&ASG=?&** (get the whole PortA status of DAEnetIP3)*
*receive: <!DOCTYPE html><html><body> **ASG=FFFF;**</body></html>*

*send:http://your.ip.address/command.html?**P=admin&ASG=?&BVG=?&CV0=?&** (send several commands at a time)*
*receive: <!DOCTYPE html><html><body> **ASG=FFFF;BVG=0F;CV0=12;**</body></html> (the answers are ordered in the same way of requests)*

Please note that:

- Each HTTP request must end with '&' symbol;
- There is limitation of the total parameters length (including password): no more than 245 symbols.
- The answer is returned in HTML file in the **body** section

From web HTTP API password can be adjusted in the following way:
Web: Admin -> HTTP API password

17.6. CRC16 (Modbus)

17.6.1. CRC16 case studies

DAEnetIP3 supports CRC16 (Modbus modification) algorithm for prevention of errors during serial communications. On figure 63 is shown how DAEnetIP3 encode/decode the CRC16 checksum.

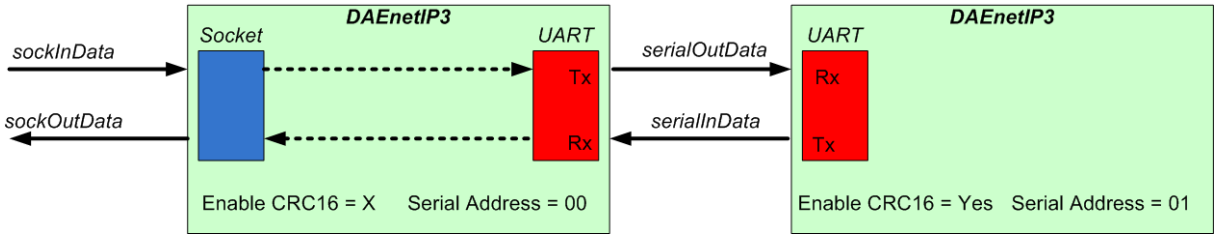

Figure 63. CRC case studies

The sockInData is the data stream that comes in to the user defined socket. sockOutData is the data stream that comes out from the user defined socket. serialOutData is the data stream that comes out to the UART interface. The serialInData is the incoming data in to the UART port. With "X" is marked if the CRC is enabled or disabled. We

On table 16 are shown different situations for CRC16 checking. With brackets [] is marked which is the first, second, third and fourth event. It is used the ASG command, which gets the digital outputs (Port A) states.

Legend:

- o – Serial address.
- o – PDU (command)
- o – CRC16 checksum
- o – Wrong byte (during communication some bit is inverted)
- o – Error code

Table 16. Examples of CRC16 calculation

Example N	sockInData	sockOutData	serialOutData	serialInData	X
1	00ASG=?;[1]	00ASG=0000;[3]	00ASG=0000A9FB;[2]	…	yes
2	00ASG=?;[1]	00ASG=0000;[3]	00ASG=0000;[2]	…	no
3	01ASG=?;[1]	01ASG=0000;[4]	01ASG=000039F6;[2]	01ASG=000039F6;[3]	yes
4	01ASG=?;[1]	01E36E2C;[4]	01ASG=000039F6;[2]	01ASG=00013 9F6;[3]	yes
5	01ASG=?;[1]	01E36E2C;[4]	01ASG=00013 9F6;[2]	01E36E2C;[3]	yes
6	01ASG=?;[1]	01E36E2C;[4]	01ASG=?;[2]	01E36E2C;[3]	no
7	…	00ASG=0000;[2]	00ASG=0000A9FB;[3]	00ASG=?2DE3;[1]	yes
8	…	02ASG=?;[2]	…	02ASG=?FCE2;[1]	yes

Comments for the examples:

- Example 1: CRC16 for DAEnetIP3 [00] is enabled. DAEnetIP3 [00] receives TCP/IP data with serial address 00. Data is sent over the serial line to DAEnetIP3 [01] with added CRC16 checksum. DAEnetIP3 [00] performs respond. DAEnetIP3 [00] receives the response over the serial network and send it over the TCP/IP.

- Example 2: CRC16 for DAEnetIP3 [00] is disabled. DAEnetIP3 [00] receives TCP/IP data with serial address 00. Data is sent over the serial line to DAEnetIP3 [01] without added CRC16 checksum. DAEnetIP3 [00] performs respond. DAEnetIP3 [00] receives the response over the serial network and send it over the TCP/IP.
- Example 3: CRC16 for DAEnetIP3 [00] is enabled. DAEnetIP3 [00] receives TCP/IP data with serial address 01. Data is sent over the serial line to DAEnetIP3 [01] with added CRC16 checksum. DAEnetIP3 [01] performs respond. DAEnetIP3 [00] receives the response over the serial network and send it over the TCP/IP.
- Example 4: CRC16 for DAEnetIP3 [00] is enabled. DAEnetIP3 [00] receives TCP/IP data with serial address 01. Data is sent over the serial line to DAEnetIP3 [01] with added CRC16 checksum. DAEnetIP3 [01] performs respond. However when data is sent back to DAEnetIP3 [00] over the serial line, some bit is wrong during serial communication. DAEnetIP3 [00] checks this and the TCP/IP response is error code E3.
- Example 5: CRC16 for DAEnetIP3 [00] is enabled. DAEnetIP3 [00] receives TCP/IP data with serial address 01. Data is sent over the serial line to DAEnetIP3 [01] with added CRC16 checksum. However some bit is wrong during serial communication. DAEnetIP3 [01] checks this and the respond to DAEnetIP3 [00] is error code E3. This error DAEnetIP3 [00] sends back (propagates) to the TCP/IP.
- Example 6: CRC16 for DAEnetIP3 [00] is disabled (but CRC16 for DAEnetIP3 [01] is enabled. DAEnetIP3 [00] receives TCP/IP data with serial address 00. Data is sent over the serial line to DAEnetIP3 [01] without added CRC16 checksum. DAEnetIP3 [01] checks the CRC16 checksum and notice that there is CRC16 error. So the response that DAEnetIP3 [01] performs response over the serial line with error code E3. DAEnetIP3 [00] retransmits this error (E3) response over the TCP/IP network.
- Example 7: CRC16 for DAEnetIP3 [00] is enabled. DAEnetIP3 [00] receives data with serial address 00 from the serial line. It checks the CRC16, remove the checksum and resent the data over the TCP/IP network. The data may be received by remote host application and notification may be indicated. DAEnetIP3 [00] sends answer back to the serial line.
- Example 8: CRC16 for DAEnetIP3 [00] is enabled. DAEnetIP3 [00] receives data with serial address 02 from the serial line. Because the serial address is not 00, but 02, then the data is just passed over the TCP/IP network.

Generally DAEnetIP3 performs/checks CRC16 checksum calculations:

- Only if this is enabled by the user (setting the CRC16 enable parameter from web: Serial Port -> CRC16.
- Only for the serial line (UART).

A good online tool for CRC16 calculation is:
http://www.lammertbies.nl/comm/info/crc-calculation.html

17.6.2. CRC16 performing

Step 1: DAEnetIP3 performs command/response/error over the serial line

Ser. Addr. (2 chars)	Command/response/error PDU (N chars)	; (1 char)

Step 2: DAEnetIP3 makes CRC16 checksum

CRC16 Checksum (4 chars)	= CRC16 of (	Ser. Addr. (2 chars)	Command/response/error PDU (N chars)	)

Step 3: DAEnetIP3 inserts the CRC16 checksum before ";". The packet is ready for sending over serial line

Ser. Addr. (2 chars)	Command/response/error PDU (N chars)	CRC16 Checksum (4 chars)	; (1 char)

Figure 64. CRC16 performing

- Example 1. Respond CRC16 calculation
  - [1] DAEnetIP3 [00] receives data over serial: 00ASG=?**2DE3**;
  - [2] DAEnetIP3 [00] resends data over TCP/IP: 00ASG=?;
  - [3] DAEnetIP3 [00] sends data over serial: 00ASG=0000**A9FB**;
  - [4] DAEnetIP3 [00] sends data over TCP/IP: 00ASG=0000;

- Example 2. Command CRC16 calculation
  - [1] DAEnetIP3 [00] receives data over TCP/IP: 01ASG=?;
  - [2] DAEnetIP3 [00] resends data over serial: 01ASG=?**FCE2**;
  - [3] DAEnetIP3 [00] receives data from DAEnetIP3 [01]: 01ASG=FF00**AB0D**;
  - [4] DAEnetIP3 [00] resends data over TCP/IP: 01ASG=FF00;

- Example 3. Error CRC16 calculation – function code is wrong.
  - [1] DAEnetIP3 [00] receives data over TCP/IP: 01ASG=?;
  - [2] DAEnetIP3 [00] resends data over serial: 01BSG=?**FCE2**; (a bit is wrong)
  - [3] DAEnetIP3 [00] receives data from DAEnetIP3 [01]: 01E3**6E2C**;
  - [4] DAEnetIP3 [00] resends data over TCP/IP: 01E3;

- Example 4. Error CRC16 calculation – address is wrong.
  - [1] DAEnetIP3 [00] receives data over TCP/IP: 01ASG=?;
  - [2] DAEnetIP3 [00] resends data over serial: 05ASG=?**FCE2**; (address bit is wrong)
  - [3] DAEnetIP3 [00] does not receive any response because there is no such address (05) in the serial network).

17.6.3. CRC16 checking

Step 1: DAEnetIP3 receives command with CRC16 over the serial line

Ser. Addr. (2 chars)	Command PDU (N chars)	CRC16 Checksum (4 chars)	; (1 char)

Step 2: DAEnetIP3 checks if the CRC16 checksum is valid

IF | CRC16 Checksum (4 chars) | == CRC16 of (| Ser. Addr. (2 chars) | Command PDU (N chars) |)

Step 3 (case 1): DAEnetIP3 performs response because the CRC16 checksum is valid.
The data is sent also over the serial line.

Ser. Addr. (2 chars)	Response PDU (N chars)	CRC16 Checksum (4 chars)	; (1 char)

Step 3 (case 2): DAEnetIP3 performs error because the CRC16 checksum is not valid.
The data is sent also over the serial line.

Ser. Addr. (2 chars)	Error code (2 chars)	CRC16 Checksum (4 chars)	; (1 char)

Figure 65.CRC16 checking

- Example 1. Correct communication.
  - [1] DAEnetIP3 [00] receives data over serial line: 00ASG=?**2DE3**;
  - [2] DAEnetIP3 [00] resends the command over TCP/IP serial network: 00ASG=?;
  - [3] DAEnetIP3 [00] checks the CRC16 checksum. It is valid.
  - [4] DAEnetIP3 [00] sends the response over the serial line: 00ASG=0000**A9FB**;

- Example 2. Bit from function code is wrong.
  - [1] DAEnetIP3 [00] receives data over serial line: 00BSG=?**2DE3**; (a bit from function code is wrong)
  - [2] DAEnetIP3 [00] resends the command over TCP/IP serial network: 00BSG=?;
  - [3] DAEnetIP3 [00] checks the CRC16 checksum. It is not valid.
  - [4] DAEnetIP3 [00] sends the error over the serial line: 00E3**AE7D**;

- Example 3. Bit from address is wrong.
  - [1] DAEnetIP3 [00] receives data over serial line: 05ASG=?**2DE3**; (a bit from function code is wrong)
  - [2] DAEnetIP3 [00] resends the command over TCP/IP serial network: 05ASG=?;
  - [3] DAEnetIP3 [00] does not perform response or error over the serial line, because the address is not [00], but [05].

17.7. Error codes

The possible error codes are:

- E1 – invalid function code
- E2 – invalid data
- E3 – invalid checksum (communication error) - for the serial line. Means that CRC16 checksum is not valid. This error does not apply to Telnet and HTTP API.

17.8. Protocol data units (PDU) description

17.8.1. Function codes for digital output port (Port A)

function, bytes 1-2	***function, byte 3***	***data***	***answer***	***comment***	***example***
AS	**From 0 (PortA.0) up to F (PortA.15)**	0 – low level, 1 – high level ? – read value	0,1	Set/get single output line state of port A	**command:** AS0=1; 'PortA.0 in 1 **answer:** AS0=1; **command:** ASF=?; 'read PortA.15 **answer:** ASF=0;
AM	**From 0 (PortA.0) up to F (PortA.15)**	0 - On/Off setting, 1 - On/Off setting & DI, 2 - On/Off setting & AI, 3 - On/Off setting & schedule, 4 - On/Off setting & remote, 5 – Inverting, 6 - Inverting & DI, 7 - Inverting & AI, 8-Inverting & schedule, 9-Inverting & remote, A-Pulses, B-Pulses & DI, C-Pulses & AI, D-Pulses & schedule, E-Pulses & remote, F-Timer, G-Timer & DI, H-Timer & AI, I-Timer & remote, ? – read value	0,1,2,3, 4,5,6,7, 8,9,A,B, C,D,E,F, G,H,I	Set/get Port A line mode	**command:** AM0=1; 'Set PortA.0 in mode On/Off setting and DI **answer:** AM0=0; **command:** AMA=?; 'Get PortA.10 mode. **answer:** AMA=0;
AN	**From 0 (PortA.0) up to F (PortA.15)**	From 0 up to 99, ? – read value	From 00 up to 99	Set/get the ON parameter. Value is from 0 to 99.	**command:** AN0=10; 'Set PortA.0 ON parameter in 10 **answer:** AM0=10; **command:** ANB=?; 'Get PortA.11 ON parameter. **answer:** ANB=10; '10
AF	**From 0**	From 0 up to 99,	From 00	Set/get the	**command:** AF0=2; 'Set PortA.0

	(PortA.0) up to F (PortA.15)	? – read value	up to 99	OFF parameter. Value is from 0 to 99.	OFF parameter in 2 **answer:** AF0=10; **command:** AFC=?; 'Get PortA.12 ON parameter. **answer:** AFC=10; '10
AD	**From 0 (PortA.0) up to F (PortA.15)**	From 0 up to 99, ? – read value	From 00 up to 99	Set/get the Delay parameter. Value is from 0 to 99.	**command:** AD1=5; 'Set PortA.1 Delay parameter in 5 **answer:** AD1=5; **command:** ADC=?; 'Get PortA.12 Delay parameter. **answer:** ADC=10; '10
A1	**From 0 (PortA.0) up to F (PortA.15)**	From 00:00:00 up to 23:59:59, ? – read value	From 00:00:00 up to 23:59:59	Set/get the Time1 parameter. The time value must be in format HH:MM:SS	**command:** A11=12:00:00; 'Set PortA.1 Time1 event at 12 o'clock **answer:** A11=12:00:00; **command:** A11=?; 'Get PortA.1 Time1 parameter. **answer:** A11=01:00:30
A2	**From 0 (PortA.0) up to F (PortA.15)**	From 00:00:00 up to 23:59:59, ? – read value	From 00:00:00 up to 23:59:59	Set/get the Time2 parameter. The time value must be in format HH:MM:SS	**command:** A21=12:00:00; 'Set PortA.1 Time1 event at 12 o'clock **answer:** A21=12:00:00; **command:** A21=?; 'Get PortA.1 Time2 parameter. **answer:** A21=01:00:30
AC	**From 0 (PortA.0) up to F (PortA.15)**	Max 10 symbols 'a'-'z', 'A'-'Z', '0'-'9', '_' and '.', ? – read value	Description string	Set/get the Description parameter.	**command:** AC1=DO1; 'Set PortA.1 description DO1 **answer:** AC1=DO0; **command:** ACC=?; 'Get PortA.12 description. **answer:** ACC=DO12;
AT	**From 0 (PortA.0) up to F (PortA.15)**	0 – seconds, 1 – minutes, 2 – hours, ? – read value	0,1 or 2	Set/get the timer/delays resolution for this channel. (2.0.0 version)	**command:** AT1=0; 'Set PortA.1 resolution in seconds **answer:** AT1=0; **command:** ATC=?; 'Get PortA.12 resolution. **answer:** ATC=2; 'hours

17.8.2. Commands for digital input port (Port B)

function, bytes 1-2	***function, byte 3***	***data***	***answer***	***comment***	***example***
BV	**From 0 (PortB.0) up to 7 (PortB.7)**	? – read value	0,1	Get the value of single PortB digital input line.	**command:** BV0=?; **answer:** BV0=1;
BV	**G**	? – read value	00-FF	Get the whole PortB value. The MSB is PortB.7. The LSB is PortB.0	**command:** BVG=?; **answer:** BV0=FF; 'all inputs are in "1"
BM	**From 0 (PortB.0) up to 7 (PortB.7)**	0-Simple reading, 1-Set output during rising slope, 2-Set output during falling slope, ? – read value	0,1,2	Set/get the PortB line mode.	**command:** BM0=1; 'Set PortB.0 mode in "Set output during rising slope" **answer:** BM0=1; **command:** BM1=?; 'Get PortB.1 mode. **answer:** BM1=0;' PortB.1 mode is "Simple reading".
BP	**From 0 (PortB.0) up to 7 (PortB.7)**	From 0 (PortA.0)up to F(PortA.15), ? – read value	0 - F	Set/get the pin of PortA that is attached to this digital input.	**command:** BP0 = F 'attaches DO15 (PortA.15) to DI0 (PortB.0) **answer:** BP0=F; **command:** BP0=?; 'Get the attached PortA pin to this input **answer:** BP0=A;
BR	**From 0 (PortB.0) up to 7 (PortB.7)**	0 – disable 1 - enable, ? – read value	0,1	Set/get the Remote control value of this digital input	**command:** BR0=1; 'Enable remote control for PortB.0 **answer:** BR0=1; **command:** BR1=?; 'Get remote value of PortB.1 **answer:** BR1=0;
BC	**From 0 (PortB.0) up to 7 (PortB.7)**	Max 10 symbols 'a'-'z', 'A'-'Z', '0'-'9', '_' and '.', ? – read value	Description string	Set/get the Description parameter.	**command:** BC1=DI1; 'Set PortB.1 Description DI1 **answer:** BC1=DI1; **command:** BC7=?; 'Get PortB.7 description. **answer:** BC7=DI7;

17.8.3. Commands for analog input port (Port C)

function, bytes 1-2	***function, byte 3***	***data***	***answer***	***comment***	***example***
CV	**From 0 (PortC.0) up to 7 (PortC.7)**	? – read value	0,1	Get the value of single PortC analog input line.	**command:** CV0=?; **answer:** CV0=1023;
CF	**From 0 (PortC.0) up to 7 (PortC.7)**	From 0 up to 99, ? – read value	1 – 99	Get/Set the refresh time. It is from 0 to 9.9 sec	**command:** CF0=1; 'Set PortC.0 refresh time in 1 **answer:** CF0=1; **command:** CF1=?; 'Get PortC.1 refresh time. **answer:** CF1=1;
CL	**From 0 (PortC.0) up to 7 (PortC.7)**	From 0 up to 1023, ? – read value	0 - 1023	Set/get the PortC line low threshold*	**command:** CL0=512; 'Set PortC.0 LT in 512 **answer:** CL0=512; **command:** CL1=?; 'Get PortC.1 LT. **answer:** CL1=100;
CH	**From 0 (PortC.0) up to 7 (PortC.7)**	From 0 up to 1023, ? – read value	0 - 1023	Set/get the PortC line high threshold*	**command:** CH0=900; 'Set PortC.0 HT in 900 **answer:** CH0=900; **command:** CH1=?; 'Get PortC.1 HT. **answer:** CH1=800;
CO	**From 0 (PortC.0) up to 7 (PortC.7)**	From 0 up to 512, ? – read value	0 – 512	Set/get the PortC line low hysteresis*	**command:** CO2=10; 'Set PortC.2 LH in 10 **answer:** CO2=10; **command:** CO3=?; 'Get PortC.3 LH. **answer:** CO3=12;
CG	**From 0 (PortC.0) up to 7 (PortC.7)**	From 0 up to 512, ? – read value	0 – 512	Set/get the PortC line high hysteresis*	**command:** CG2=10; 'Set PortC.2 HH in 10 **answer:** CG2=10; **command:** CG3=?; 'Get PortC.3 HH. **answer:** CG3=12;
CM	**From 0 (PortC.0) up to 7 (PortC.7)**	0 – None, 1 – Low, 2 – High, 3 – Low/High, 4 – Acc, ? – read value	0 – 4	Set/get the PortC line mode	**command:** CM3=1; 'Set PortC.3 mode in Low. **answer:** CM3=1; **command:** CM4=?; **answer:** CM4=4; 'Acc
CP	**From 0 (PortC.0) up to 7 (PortC.7)**	From 0 (PortA.0)up to F(PortA.15), ? – read value	0 - F	Set/get the pin of PortA that is attached to this analog input.	**command:** CP0 = F 'attaches DO15 (PortA.15) to AI0 (PortC.0) **answer:** CP0=F; **command:** CP0=?; 'Get the attached PortA pin to this input **answer:** CP0=A;
CR	**From 0 (PortC.0) up to 7**	0 – disable 1 - enable, ? – read value	0,1	Set/get the Remote control value	**command:** CR0=1; 'Enable remote control for PortC.0 **answer:** CR0=1;

	(PortC.7)			of this analog input	**command:** CR1=?; 'Get remote value of PortC.1 **answer:** CR1=0;
CC	**From 0 (PortC.0) up to 7 (PortC.7)**	Max 10 symbols 'a'-'z', 'A'-'Z', '0'-'9', '_' and '.', ? – read value	Description string	Set/get the Description parameter.	**command:** CC1=AI1; 'Set PortC.1 Description AI1 **answer:** CC1=AI1; **command:** CC7=?; 'Get PortC.7 description. **answer:** CC7=AI7;
CD	**From 0 (PortC.0) up to 7 (PortC.7)**	? – read value	Value with dimension	Get the ADC value with dimension (2.0.0 version)	**command:** CD0=?; 'Get PortC.1 value with dimension **answer:** CC1=45.27Volts;
CS	**From 0 (PortC.0) up to 7 (PortC.7)**	Max 5 symbols 'a'-'z', 'A'-'Z', '0'-'9', '_' and '.', ? – read value	Dimension (Label)	Get/set the dimension (label) for this channel (2.0.0 version)	**command:** CS1=Volts; 'Set PortC.1 dimension for AI1 **answer:** CS1=Volts; **command:** CS7=?; 'Get PortC.7 description. **answer:** CS7=cm;
CI	**From 0 (PortC.0) up to 7 (PortC.7)**	From -9999.99 up to 9999.99, ? – read value	-9999.99 up to 9999.99	Set/get the value at ADC=0 (minimum value) (2.0.0 version)	**command:** CI1=-19.12; 'Set PortC.1 min value AI1 **answer:** CI1=-19.12; **command:** CI7=?; 'Get PortC.7 min value. **answer:** CI7=123.00;
CA	**From 0 (PortC.0) up to 7 (PortC.7)**	From -9999.99 up to 9999.99, ? – read value	-9999.99 up to 9999.99	Set/get the value at ADC=1023 (maximum value) (2.0.0 version)	**command:** CA1=119.12; 'Set PortC.1 max value AI1 **answer:** CA1=119.12; **command:** CA7=?; 'Get PortC.7 max value. **answer:** CA7=1721.12;

*(HT-HH)>(LT+LH), (HT+HH)<1023, (LT-LH)>0

17.8.4. Commands for system clock

function, bytes 1-2	***function, byte 3***	***data***	***answer***	***comment***	***example***
RT	**C**	From 01.01.2000/00:00:00 up to 31.12.2099/23:59:59, ? – read value	From 01.01.2000/00:00:00 up to 31.12.2099/23:59:59	Get/set the RTC value (system time).	**command:** RTC=08.08.2011/12:30:00; **answer:** RTC=08.08.2011/12:30:00; **command:** RTC=?; 'get time **answer:** RTC=08.08.2011/12:30:05;
RZ	**O**	From -15 up to +15, ? – read value	From -15 up to +15	Get/set the offset in hours(for NTP synchronization).	**command:** RZO=+2; **answer:** RZO=+2; **command:** RZO=?; 'get offset **answer:** RZO=-3;
RN	**T**	1	OK	Synchronize the RTC from NTP server	**command:** RNT=1; **answer:** RNT=OK;
RL	**S**	? – read value	From 01.01.2000/00:00:00 up to 31.12.2099/23:59:59	Retrieves when the clock was synchronized for last time successfully (2.0.0 version)	**command:** RLS=?; **answer:** RLS=14:39:45/16.09.2013;

17.8.5. Commands for serial port

function, bytes 1-2	***function, byte 3***	***data***	***answer***	***comment***	***example***
SA	**D**	From 00 up to FF ? – read value	From 00 up to FF	Get/set **serial port address**. The value is two bytes hex.	**command:** SAD=0A; **answer:** SAD=0A; **command:** SAD=?; **answer:** SAD=1E;
SB	**R**	300, 600, 1200, 2400, 4800, 9600, 14400, 19200, 38400, 56000, 57600, 115200, 128000, 256000 , ? – read value	300, 600, 1200, 2400, 4800, 9600, 14400, 19200, 38400, 56000, 57600, 115200, 128000 or 256000	Get/set the serial port **baudrate**.	**command:** SBR=9600; **answer:** SBR=9600; **command:** SBR=?; **answer:** SBR=256000;
SP	**T**	1 – None, 2 – Even, 3 – Mark, 4 – Odd, 5 – Space, ? – read value	1 – None, 2 – Even, 3 – Mark, 4 – Odd, 5 – Space	Get/set the serial port **parity**.	**command:** SPT=1; ‘None **answer:** SPT=1; **command:** SPT=?; **answer:** SPT=2; ‘ Even
ST	**T**	7 or 8 (data bits) ? – read value	7,8	Get/set serial port **data bits**.	**command:** SDB=7; **answer:** SDB=7; **command:** SDB=?; **answer:** SDB=8;
SC	**L**	0 – Low during send, 1 – High during send, ? – read value	1,2	Get/set **control (direction) line for serial port** communicatio n	**command:** SCL=1; **answer:** SCL=1; **command:** SCL=?; **answer:** SCL=2;
SD	**M**	0 – Full duplex, 1 – Half duplex, ? – read value	1,2	Get/set **duplex mode for serial port** communicatio n	**command:** SDM=1; **answer:** SDM=1; **command:** SDM=?; **answer:** SDM=2;
S1	**6**	0 – disable CRC16, 1 – enable CTC16, ? – read value	0,1	Get/set **CRC16** checksum for serial port communicatio n	**command:** S16=1; **answer:** S16=1; **command:** S16=?; **answer:** S16=0;

The settings will take effect after restart

17.8.6. Commands for admin settings

function, bytes 1-2	***function, byte 3***	***data***	***answer***	***comment***	***example***
MP	**T**	Max 10 symbols 'a'-'z', 'A'-'Z', '0'-'9', '_' and '.', ? – read value	Telnet password string	Set/Get the **telnet password** (max 10 symbols)	**command:** MPT=admin; **answer:** MPT=admin; **command:** MPT=?; **answer:** MPT=secret;
MP	**W**	Max 10 symbols 'a'-'z', 'A'-'Z', '0'-'9', '_' and '.', ? – read value	Web password string	Set/Get the **web password** (max 10 symbols)	**command:** MPW=admin; **answer:** MPW =admin; **command:** MPW =?; **answer:** MPW =secret;
MP	**4**	Max 10 symbols 'a'-'z', 'A'-'Z', '0'-'9', '_' and '.', ? – read value	RC4 password string	Set/Get the **RC4 password** (max 10 symbols)	**command:** MP4=admin; **answer:** MP4=admin; **command:** MP4=?; **answer:** MP4=secret;
MP	**R**	From 1 to 65535, ? – read value	From 1 to 65535	Set/get the **remote DAEnetIP3 server port**. This is for distributed mode.	**command:** MPR=1005; **answer:** MPR=1005; **command:** MPR=?; **answer:** MPR=1005;
MP	**N**	From 1 to 65535, ? – read value	From 1 to 65535	Set/get the **NTP server port**.	**command:** MPN=37; **answer:** MPN =37; **command:** MPN =?; **answer:** MPN =37;
MP	**H**	From 1 to 65535, ? – read value	From 1 to 65535	Set/get the **HTTP port**.	**command:** MPH=80; **answer:** MPH =80; **command:** MPH =?; **answer:** MPH =80;
MP	**L**	From 1 to 65531, ? – read value	From 1 to 65531	Set/get the **Local Port Range**.	**command:** MPH=1005; 'Set range 1005-1009 **answer:** MPH =1005; **command:** MPH =?; **answer:** MPH =1005;
MP	**U**	From 1 to 65535, ? – read value	From 1 to 65535	Set/get the **User Socket Port**.	**command:** MPU=1010; **answer:** MPU =1010; **command:** MPU =?; **answer:** MPU =1010;
MI	**P**	From 000.000.000.000 up to 255.255.255.255, ? – read value	From 000.000.000.000 up to 255.255.255.255	Set/get Eth IP address	**command:** MIP=192.168.0.5; **answer:** MIP =192.168.0.5; **command:** MIP =?; **answer:** MIP =192.168.0.10;
MI	**R**	From 000.000.000.000 up to 255.255.255.255, ? – read value	From 000.000.000.000 up to 255.255.255.255	Set/get Eth IP protection address	**command:** MIR=192.168.0.1; **answer:** MIR =192.168.0.1; **command:** MIR =?; **answer:** MIR =192.168.0.2;

MS	**R**	From 000.000.000.000 up to 255.255.255.255, ? – read value	From 000.000.000.000 up to 255.255.255.255	Set/get the IP address of the remote server.	**command:** MSR=192.168.0.10; **answer:** MSR =192.168.0.10; **command:** MSR =?; **answer:** MSR =192.168.0.10;
MS	**N**	From 000.000.000.000 up to 255.255.255.255, ? – read value	From 000.000.000.000 up to 255.255.255.255	Set/get the IP address of the NTP server.	**command:** MSN=192.168.0.10; **answer:** MSN =192.168.0.50; **command:** MSN =?; **answer:** MSN =192.168.0.50;
MM	**A**	From 000.000.000.000 up to 255.255.255.255, ? – read value	From 000.000.000.000 up to 255.255.255.255	Set/get the Eth network mask.	**command:** MMA=255.255.255.0; **answer:** MMA=255.255.255.0; **command:** MMA =?; **answer:** MMA=255.255.255.0;
MM	**C**	? – read value	From 00:00:00:00:00:00 to FF:FF:FF:FF:FF:FF	Get the Eth MAC address.	**command:** MMC =?; **answer:** MMC=00:12:34:56:78:90;
ME	**T**	0,1, ? – read value	0,1	Get/Set enabling of Telnet.	**command:** MET=1; 'Enable Telnet **answer:** MET=1; **command:** MET =?; **answer:** MET=0;
ME	**4**	0,1, ? – read value	0,1	Get/Set enabling of RC4 encryption.	**command:** ME4=1; 'Enable RC4 **answer:** ME4=1; **command:** ME4 =?; **answer:** ME4=0;
MW	**M**	0 – Ethernet 10/10 Mbit, 1 – Wi-Fi 802.11, ? – read value	0,1	Get/Set working mode.	command: MWM=0; 'Ethernet 10/10 Mbit **answer: MWM =0:** **command:** MWM =?; **answer:** MWM =1; 'Wi-Fi 802.11
MG	**W**	From 000.000.000.000 up to 255.255.255.255, ? – read value	From 000.000.000.000 up to 255.255.255.255	Set/get the Eth gateway address.	**command:** MGW=192.168.0.1; **answer:** MGW =192.168.0.1; **command:** MGW =?; **answer:** MGW =192.168.0.1;
MF	**V**	5 char string that represents the version	Firmware version	Get the firmware version	**command:** MFV =?; **answer:** MFV =1.0.0;

MN	**A**	Max 15 symbols 'a'-'z', 'A'-'Z', '0'-'9', '_' and '.', ? – read value	Module name	Get/set the module name (2.0.0 version)	**command:** MNA=?; **answer:** MNA=DAEnetIP3; **command:** MNA=Module1; **answer:** MNA=Module1;
ME	**N**	0,1, ? – read value	0,1	Get/Set enabling of NTP auto-sync. (2.0.0 version)	**command:** MEN=?; **answer:** MEN=1; **command:** MEN=0; **answer:** MEN=0;
MP	**A**	Max 10 symbols 'a'-'z', 'A'-'Z', '0'-'9', '_' and '.', ? – read value	String, HTTP API password	Get/set HTTP API password (2.0.0 version)	**command:** MPA=?; **answer:** MPA=admin; **command:** MPA=test; **answer:** MPA=test;
MS	**S**	From 000.000.000.000 up to 255.255.255.255, ? – read value	From 000.000.000.000 up to 255.255.255.255	Set/get the IP address of E-mail server. (2.0.0 version)	**command:** MSS=192.168.0.30; **answer:** MSS=192.168.0.30; **command:** MSS=?; **answer:** MSS=192.168.0.30;
MP	**S**	From 1 to 65535, ? – read value	From 1 to 65535	Set/get the SMTP server port. (2.0.0 version)	**command:** MPS=25; **answer:** MPS=25; **command:** MPS=?; **answer:** MPS=26;
MS	**E**	Max 30 symbols 'a'-'z', 'A'-'Z', '0'-'9', '_' and '.', ? – read value	Sender's e-mail	Get/set the sender's e-mail. (2.0.0 version)	**command:** MSE=?; **answer:** MSE=test@gmail.com; **command:** MSE=test@yahoo.com; **answer:** MSE=test@yahoo.com;
MS	**V**	Max 30 symbols 'a'-'z', 'A'-'Z', '0'-'9', '_' and '.', ? – read value	Receiver's e-mail	Get/set the receiver's e-mail. (2.0.0 version)	**command:** MSV=?; **answer:** MSV=test@gmail.com; **command:** MSV=test@yahoo.com; **answer:** MSV=test@yahoo.com;
MS	**U**	Max 30 symbols 'a'-'z', 'A'-'Z', '0'-'9', '_' and '.', ? – read value	SMTP username	Get/set the SMTP login username. (2.0.0 version)	**command:** MSU=?; **answer:** MSU=username **command:** MSU=username1; **answer:** MSU=username1;
MS	**P**	Max 30 symbols 'a'-'z', 'A'-'Z', '0'-'9', '_' and '.', ? – read value	SMTP password	Get/set the SMTP password. (2.0.0 version)	**command:** MSP=?; **answer:** MSP=pass **command:** MSP=pass1; **answer:** MSP=pass1;
MN	**1**	0,1, ? – read value	0,1	Get/Set enabling "AI" event. (2.0.0 version)	**command:** MN1=?; **answer:** MN1=1; **command:** MN1=0; **answer:** MN1=0;
MN	**2**	0,1, ? – read value	0,1	Get/Set enabling "DI" event. (2.0.0 version)	**command:** MN2=?; **answer:** MN2=1; **command:** MN2=0; **answer:** MN2=0;

MN	**3**	0,1, ? – read value	0,1	Get/Set enabling "On-Boot" event. (2.0.0 version)	**command:** MN3=?; **answer:** MN3=1; **command:** MN3=0; **answer:** MN3=0;
MN	**4**	0,1, ? – read value	0,1	Get/Set enabling "NTP" event. (2.0.0 version)	**command:** MN4=?; **answer:** MN4=1; **command:** MN4=0; **answer:** MN4=0;
MN	**5**	From 0 up to 99 ? – read value	0-99	Get/Set the interval (in minutes) over which it will be send "Keep-alive" email. (2.0.0 version)	**command:** MN5=?; **answer:** MN5=1; **command:** MN5=99; **answer:** MN5=99;

Some of the settings will take effect after restart.

17.8.7. Commands for Wi-Fi settings (optional)

function, bytes 1-2	***function, byte 3***	***data***	***answer***	***comment***	***example***
WI	**P**	From 000.000.000.000 up to 255.255.255.255, ? – read value	From 000.000.000.000 up to 255.255.255.255	Set/get the **Wi-Fi (Wln) IP address**.	**command:** WIP=192.168.0.1; **answer:** WIP =192.168.0.1; **command:** WIP =?; **answer:** WIP =192.168.0.1;
WN	**M**	From 000.000.000.000 up to 255.255.255.255, ? – read value	From 000.000.000.000 up to 255.255.255.255	Set/get the **Wi-Fi (Wln) Mask**.	**command:** WNM =255.255.255.0; **answer:** WNM =255.255.255.0; **command:** WNM =?; **answer:** WNM =255.255.255.0;
WD	**G**	From 000.000.000.000 up to 255.255.255.255, ? – read value	From 000.000.000.000 up to 255.255.255.255	Set/get the **Wi-Fi (Wln) gateway**.	**command:** WDG =192.168.0.1; **answer:** WDG =192.168.0.1; **command:** WDG =?; **answer:** WDG =192.168.0.1;
WR	**G**	0 – FCC, 1 – EU, 2 – JAPAN, 3 – OTHER, ? – read value	0,1,2,3	Set/get the **Wi-Fi interface region**.	**command:** WRG=0; ‘ FCC **answer:** WRG=0; **command:** WRG=1; ‘ EU **answer:** WRG=1;
WS	**I**	Max 15 symbols 'a'-'z', 'A'-'Z', '0'-'9', '_' and '.', ? – read value	WiFi SSID	Set/get the **Wi-Fi SSID**.	**command:** WSI=Network; **answer:** WSI=Network; **command:** WSI =?; **answer:** WSI = Network;
WO	**D**	0 - WEP64, 1 - WEP128, 2 - WPA/TKIP 3 - WP2/AES, ? – read value	Security mode	Set/get the **Wi-Fi security mode**. After executing this command the controller will need about 2 minutes to calculate the pre-shared key (in case of WPA/WPA2)	**command:** WOD=?; **answer:** WOD=1; **command:** WOD =2; **answer:** WOD = 2;
WH	**S**	? – read value	From 0 up to 256, NOSIGNAL	Return the Wi-Fi interface status in units from 0 up to 256. If the controller is not associated, it returns NOSIGNAL	**command:** WHS=?; **answer:** WHS=NOSIGNAL; 'it is not associated to the Wi-Fi network **command:** WHS =?; **answer:** WHS = 176; 'signal is good

WE	**P**	Max 15 symbols 'a'-'z', 'A'-'Z', '0'-'9', '_' and '.', ? – read value	WiFi password	Set/get the **Wi-Fi password**. It may be 5 or 13 symbols (for WEP) or max 15 symbols for WPA/WPA2	**command:** WEP=admin; **answer:** WEP= admin; **command:** WEP =?; **answer:** WEP = admin;
WM	**C**	? – read value	From 00:00:00:00:00:00 to FF:FF:FF:FF:FF:FF	Get the **Wi-Fi (Wln) MAC address**.	**command:** WMC =?; **answer:** MMC=00:12:34:56:78:90;

Some of the settings will take effect after restart.

17.8.8. System commands

function, bytes 1-2	***function, byte 3***	***data***	***answer***	***comment***	***example***
YR	**T**	1	From 000.000.000.000 up to 255.255.255.255	Makes system reset.	**command:** YRT=1; 'Reset **answer:** YRT=1;
YD	**F**	1	From 000.000.000.000 up to 255.255.255.255	Loads the default settings and after 15 seconds makes reset.	**command:** YDF=1; 'Default settings **answer:** YDF=1;

18. Appendix 1. Connectors and LED indicators

18.1. DAEnetIP3 ports view

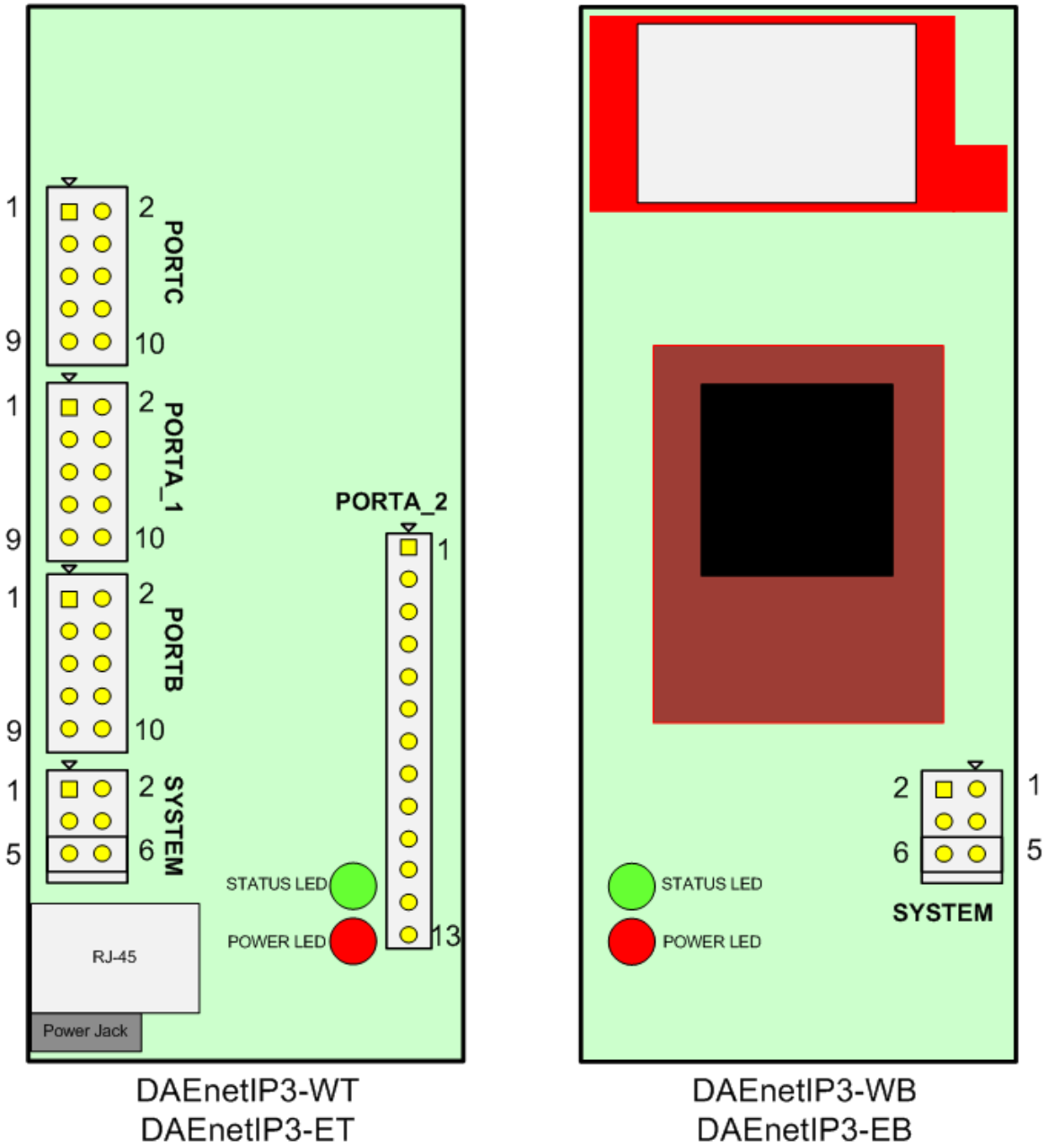

Figure 66. DAEnetIP3 ports

18.2. DAEnetIP3 ports description

Table 17. Port A_1

	PortA_1 (digital outputs)		
Pin N	**Bit**	**Function**	**Dir**
1	0	Free	Out
2	1	Free	Out
3	2	Free	Out
4	3	Free	Out
5	4	Free	Out
6	5	Free	Out
7	6	Free	Out
8	7	Free	Out
9	-	GND	PWR
10	-	+3.3V DC	PWR

Table 18. Port A_2

	PortA_2 (digital outputs)		
Pin N	**Bit**	**Function**	**Dir**
1	8	Free	Out
2	9	Free	Out
3	10	Free	Out
4	11	Free	Out
5	12	Free	Out
6	-	+12V DC or +24VDC	PWR
7	-	+12V DC or +24VDC	PWR
8	-	GND	PWR
9	-	GND	PWR
10	-	GND	PWR
11	13	Free	Out
12	14	Free	Out
13	15	Free	Out

Table 19. Port B

	PortB (digital inputs)		
Pin N	**Bit**	**Function**	**Dir**
1	0	Free	In
2	1	Free	In
3	2	Free	In
4	3	Free	In
5	4	Free	In
6	5	Free	In
7	6	Free	In
8	7	Free	In
9	-	GND	PWR

10	-	+3.3V DC	PWR

Table 20. Port C

	PortC (analog inputs)		
Pin N	**Bit**	**Function**	**Dir**
1	0	Free	Ain
2	1	Free	Ain
3	2	Free	Ain
4	3	Free	Ain
5	4	Free	Ain
6	5	Free	Ain
7	6	Free	Ain
8	7	Free	Ain
9	-	GND	PWR
10	-	+2.048V DC	VREF

Table 21. UART

	UART		
Pin N	**Bit**	**Function**	**Dir**
1	-	TX	Out
2	-	RX	In
3	-	DIR	Out
4	-	GND	PWR

Table 22. SYSTEM

	SYSTEM		
Pin N	**Bit**	**Function**	**Dir**
1	-	Reset	In
2	-	+3.3V DC	PWR
3	-	Reserved	In
4	-	GND	PWR
5	-	Default	In
6	-	GND	PWR

Legend:

- “Free” – the pin is free to be used by user.
- “XXXXXX” - the pin is reserved for special function – can not be accessed.
- “In” – the pin is digital input
- “Out” – the pin is digital output
- “Ain” – the pin is analog input

18.3. DAEnetIP3 power jack and RJ-45 port

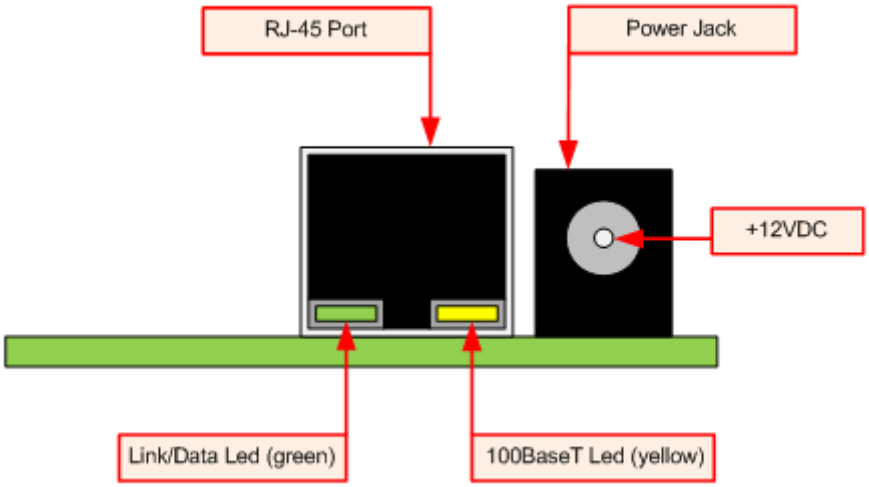

Figure 67. DAEnetIP3 RJ-45 Port and Power Jack

The power jack is for power supply. **The middle pin of the power jack is +VDC!**

RJ-45 Port is for Ethernet cable connection. The devices recognize straight or cross-over UTP cable (auto-MDIX).
The RJ-45 Port has two leds (green and yellow). The green led is turned on when "live" Ethernet cable is plugged into the device. The LED blinks whenever an Ethernet packet is received. The yellow is turned on when the device links with the hub at 100Mb. The LED is off when the link is established at 10Mb.

18.4. DAEnetIP3 Led indicators

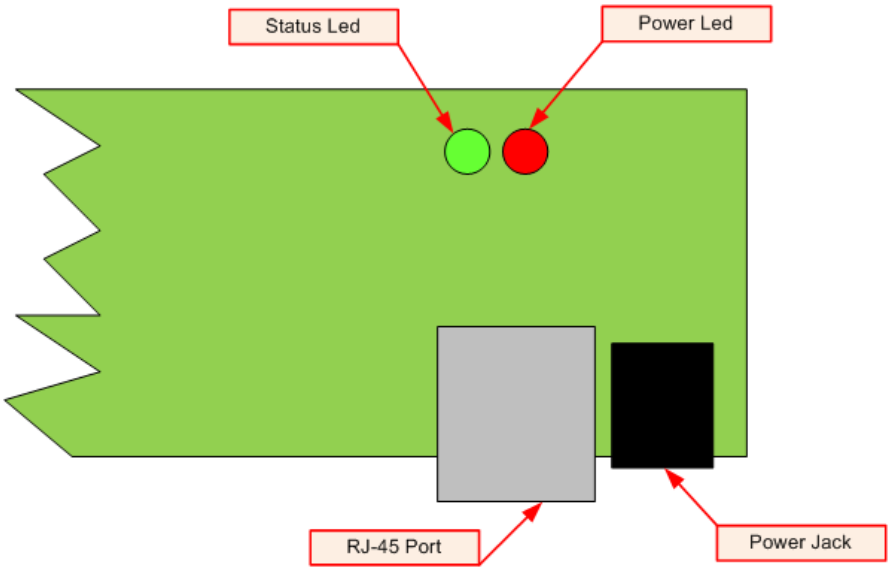

Figure 68. Led indicators

DAEnetIP3 has two extra led indicators:

- Power Led. It is red and if it is on then the controller is powered up. It is connected to +3.3V source. This led is marked on the PCB as “POW”.
- Status Led. It is green and shows the status of the connection with other DAEnetIP3 (when the controllers works in distributed mode). This led is marked on the PCB as “STAT”. There are 3 modes
    - Remote DAEnetIP3 controller is found – the status led is constantly ON.

Figure 69. Indication for connected state to remote host

    - Remote DAEnetIP3 controller is found, but the port is wrong – the status led is ON/OFF with 0.2 second period.

Figure 70. Indication for no port found state to remote host

    - Remote DAEnetIP3 controller is not found at all – the status led is ON/OFF with 1 second period.

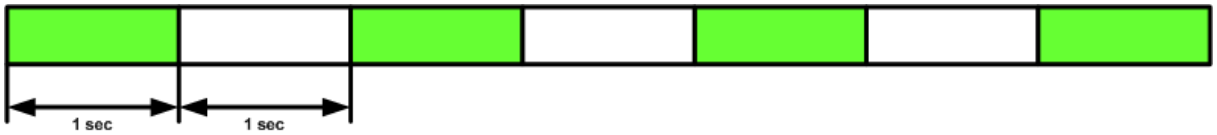

Figure 71. Indication for no IP address found state to remote host

18.5. DAEnetIP3 Wi-Fi led indicator and external antenna connector

Note that this is only for DAEnetIP3-TW and DAEnetIP3-BW

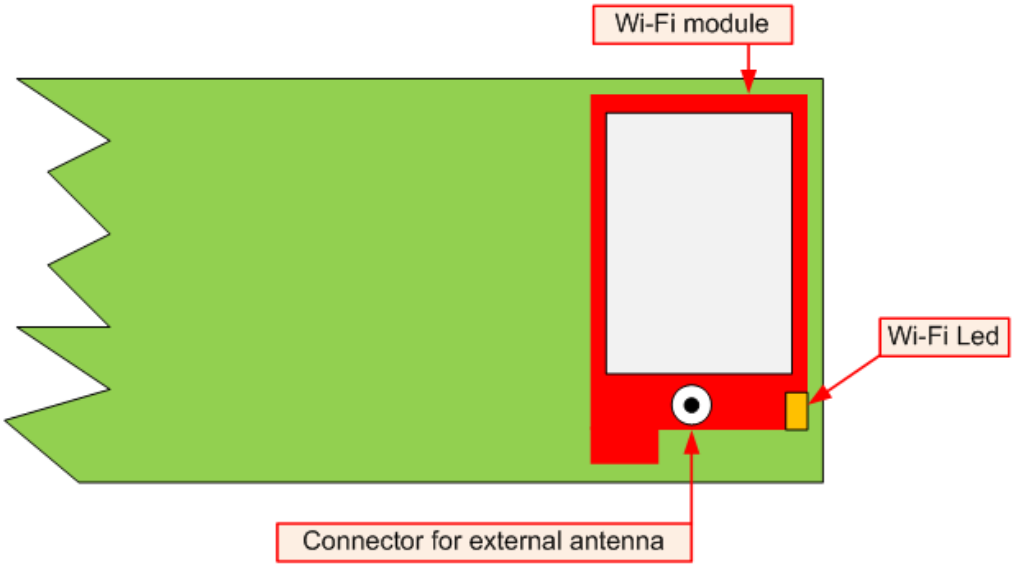

Figure 72. DAEnetIP3 Wi-Fi led indicator an external antenna socket.

DAEnetIP3 Wi-Fi module has orange led for wireless connection status. If the led is on, then the connection is established. If it is off DAEnetIP3 is not connected via wireless. If the led is flashing, then the connection is being established. DAEnetIP3 has external antenna socket (I-PEX MHF-2).

19. Appendix 2. Connecting the controller to LAN/WLAN/WAN

19.1. UTP cable connection with PC for first time

1. Connect DAEnetIP3 RJ45 port with UTP (doesn't matter crossover or straight) cable.
2. Connect the PC with the other side of the UTP cable.
3. Change the IP of the PC. It may be for example 192.168.0.1. (DAEnetIP3 is shipped with 192.168.0.100)
4. Supply DAEnetIP3 with power supply 12 VDC or 24VDC (the middle pin of DAEnetIP3 power jack is +12VDC or +24VDC). The power led (with red color) must be on.
5. Open your browser (IE, Firefox, Opera) and type 192.168.0.100 in the address bar.
6. Use ***admin*** for password.

19.2. UTP cable connection with router

1. Connect DAEnetIP3 RJ45 port with UTP (doesn't matter crossover or straight) cable.
2. Connect PC with the other side of the UTP cable.
3. Remember or write down the IP of the PC (for example we accept it is 192.168.1.2).
4. Change the IP of the PC. It may be for example 192.168.0.1. (DAEnetIP3 is shipped with 192.168.0.100).
5. Supply DAEnetIP3 with power supply 12 VDC or 24VDC (the middle pin of DAEnetIP3 power jack is +12VDC or +24VDC). The power led (with red color) must be on.
6. Open your browser (IE, Firefox, Opera) and type 192.168.0.100 in the address bar.
7. Use ***admin*** for password.
8. Open admin settings.
9. Change the Eth IP address of DAEnetIP3. Make it to be in one network with your router and PC. For example if your router is with IP 192.168.1.1 and PC with 192.168.1.2, make DAEnetIP3 with 192.168.1.100. Eth mask must be 255.255.255.0 and Eth gateway 192.168.1.1 (router IP)
10. Unplug the power supply.
11. Disconnect the UTP cable from PC and connect it to the router.
12. Supply again the DAEnetIP3
13. Give back the old IP of the PC (192.168.1.2)
14. Open browser and type 192.168.1.100.
15. Now you may access the DAEnetIP3 controller with router via router from PC.

19.3. Wi-Fi connection with PC for first time

1. Create ad-hoc Wi-Fi network with your PC. Your OS must support this. For example Microsoft Windows 7 supports this function. We accept the name of Ad-Hoc (SSID) is ***Network***, the encryption type is **WEP – 64** and the password is **admin**.
2. Make the IP of this wireless interface of your PC for example 192.168.1.1 and mask 255.255.255.0
3. Connect DAEnetIP3 RJ45 port with UTP (doesn't matter crossover or straight) cable.
4. Connect PC with the other side of the UTP cable.
5. Change the IP of LAN card of the PC. It may be for example 192.168.0.1. (DAEnetIP3 is with 192.168.0.100).
6. Supply DAEnetIP3 with power supply 12 VDC or 24VDC (the middle pin of DAEnetIP3 power jack is +12VDC or +24VDC). The power led (with red color) must be on.
7. Open your browser (IE, Firefox, Opera) and type 192.168.0.100 in the address bar.
8. Use ***admin*** for password.
9. Open Wi-Fi settings.
10. Change the Wln IP address of DAEnetIP3. Make it to be in one network with your PC Ad-Hoc network. We accepted the IP of the PC Ad-Hoc is 192.168.1.1. So the Wln IP of the DAEnetIP3 Wi-Fi interface may be 192.168.1.2. Wln Mask = 255.255.255.0 and Wln gateway is 192.168.1.1.
11. Click "Save" button.
12. Unplug the power supply.
13. Remove the UTP cable from the PC and controller.
14. Supply again the DAEnetIP3.
15. The orange Wi-Fi status led of DAEnetIP3 must blink initially and then must be on constantly. This means the controller is connected to the Wireless network. If the led is off then DAEnetIP3 is not connected to the Wireless network because some settings are not correct. If so you need to check out the settings again.
16. If the DAEnetIP3 is connected properly, open browser and type 192.168.1.2.
17. Now you may access the DAEnetIP3 controller over Wi-Fi.

19.4. Wi-Fi connection with router

1. Connect DAEnetIP3 RJ45 port with UTP (doesn't matter crossover or straight) cable.
2. Connect PC with the other side of the UTP cable.
3. Change the IP of LAN card of the PC. It may be for example 192.168.0.1. (DAEnetIP3 is with 192.168.0.100).
4. Supply DAEnetIP3 with power supply 12 VDC or 24VDC (the middle pin of DAEnetIP3 power jack is +12VDC or +24VDC). The power led (with red color) must be on.
5. Open your browser (IE, Firefox, Opera) and type 192.168.0.100 in the address bar.
6. Use admin for password.
7. Open Wi-Fi settings.
8. Change the Wln IP address of DAEnetIP3. Make it to be in one network with your Wi-Fi network. We accepted the IP of the Wi-Fi network is 192.168.1.X. So the Wln IP of the DAEnetIP3 Wi-Fi interface may be 192.168.1.2. Wln Mask = 255.255.255.0 and Wln gateway is 192.168.1.1 (The IP of your router). Set the SSID and WEP password.
9. Click "Save" button.
10. Unplug the power supply.
11. Remove the UTP cable from the PC and controller.
12. Supply again the DAEnetIP3 with 12VDC or 24VDC.
13. The orange Wi-Fi status led of DAEnetIP3 must blink initially and then must be on constantly. This means the controller is connected to the Wireless network. If the led is off then DAEnetIP3 is not connected to the Wireless network because some settings are not correct. If so you need to check out the settings again. Also you may restart your router (just in case).
14. If the DAEnetIP3 is connected properly, open browser and type 192.168.1.2.
15. Now you may access the DAEnetIP3 controller over Wi-Fi.

WARNING !

- Do not touch DAEnetIP3 while it is powered up – this may damage the DAEnetIP3.
- Do not reverse the polarity of the power supply – this will damage the DAEnetIP3.

20. Appendix 3. Port-forwarding

Since the device does not support DHCP and DNS, the only way to access it from outside network is to make port-forwarding. There is lot of information what is and how to make it. This document is not object of that but it has aim to demonstrate mostly which ports are used for port-forwarding.

The possible ports which must be forwarded are:

- HTTP port (by default it is 80)
- User socket port (by default it is 1010)
- Incoming ports range for distributed mode (by default it is 1005-1009)

For example if the module is with IP 192.168.1.50 (router model is TL-WR340G/TL-WR340GD) one possible port-forwarding scheme is shown on the image bellow.

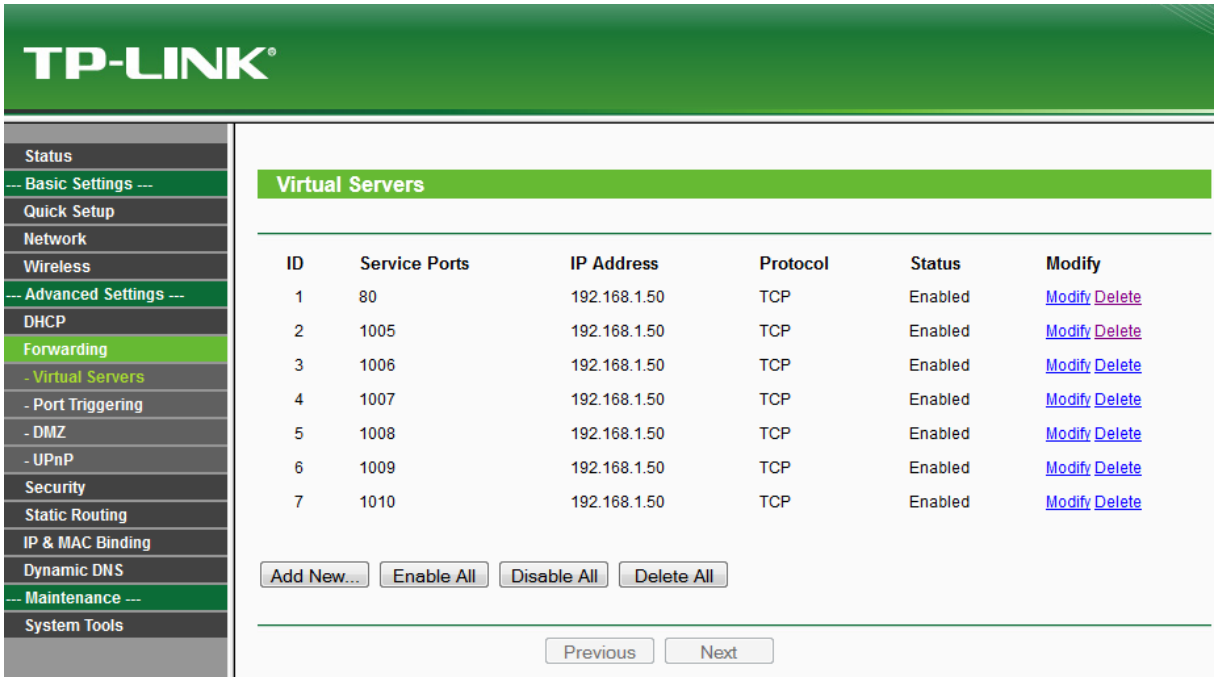

Figure 73. TP-Link **WR340G/TL-WR340GD example port-forwarding settings for DAEnetIP3**

A good link for port-forwarding with setting up tutorials for different routers is this one.

21. Appendix 4. Mobile apps for DAEnetIP3

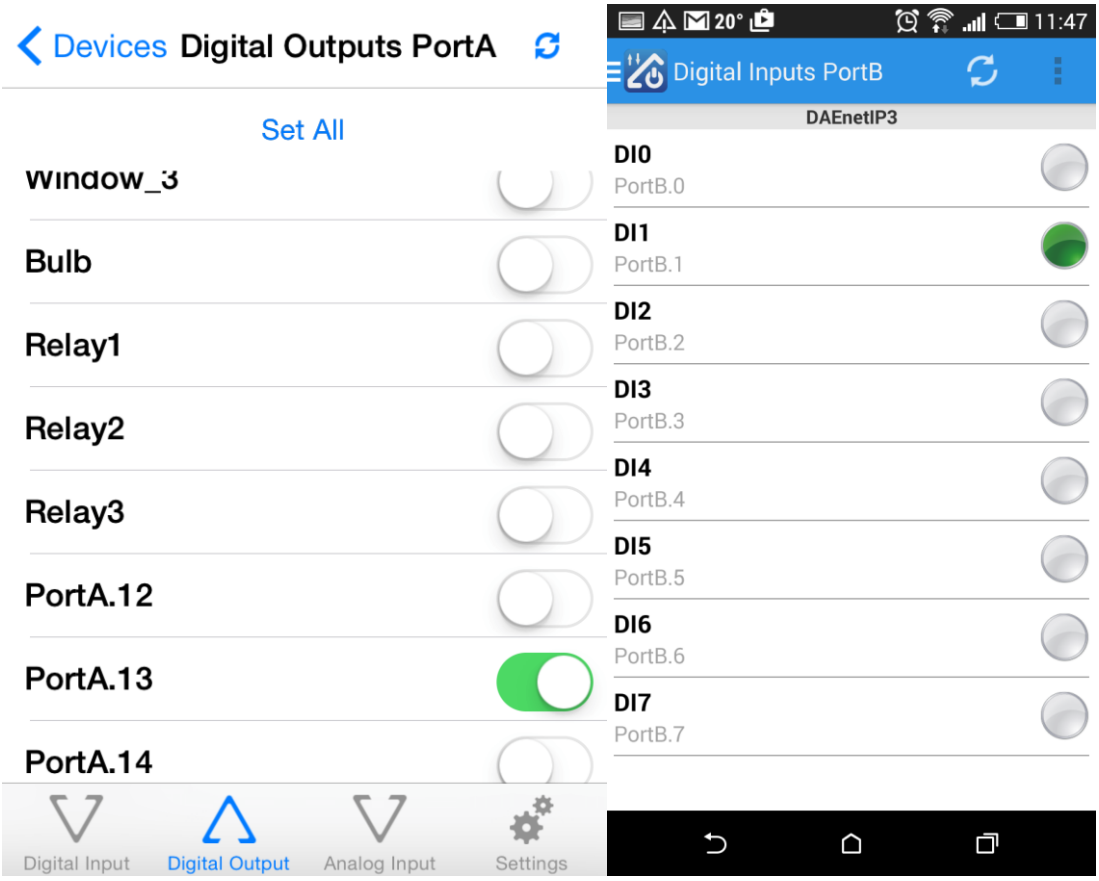

Figure 74. Android and iOS apps for DAEnetIP3

22. Appendix 5. I/O Ports

22.1. Digital outputs (PortA)

DAEnetIP3 has 16 digital outputs port. This port is called Port A. Each output line has pull-down resistor 10K to GND (figure 75). The low level is 0V. The high level is 3.3V. **Be careful, the outputs are connected directly to the MCU pins. Incorrect connections or over-voltage may damage the DAEnetIP3 controller !**

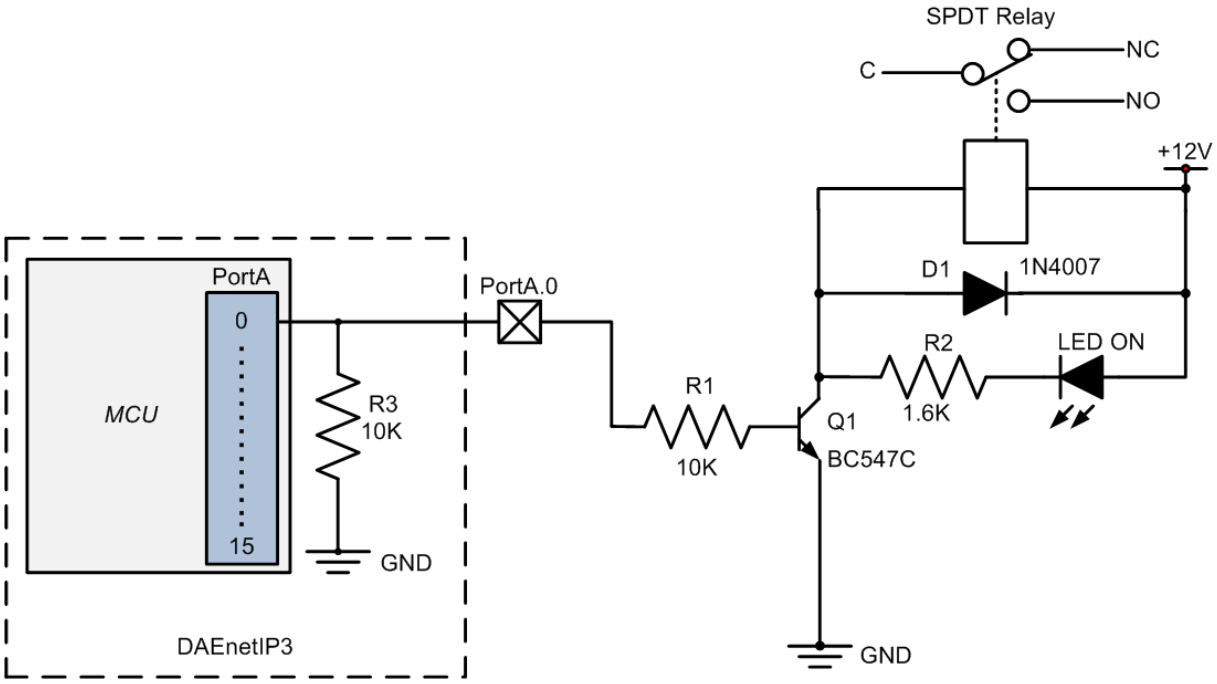

Figure 75. Connecting 12V relay to PortA.0

22.2. Digital inputs (PortB)

DAEnetIP3 has 8 digital inputs port. This port is called Port B. Each output line has pull-up resistor 10K to 3.3V (figure 76). When the input is not connected, its state is high (1). **Be careful, the inputs are connected directly to the MCU pins. Incorrect connections or over-voltage may damage the DAEnetIP3 controller! That's why it is recommend to use R2 resistor in the following way.**

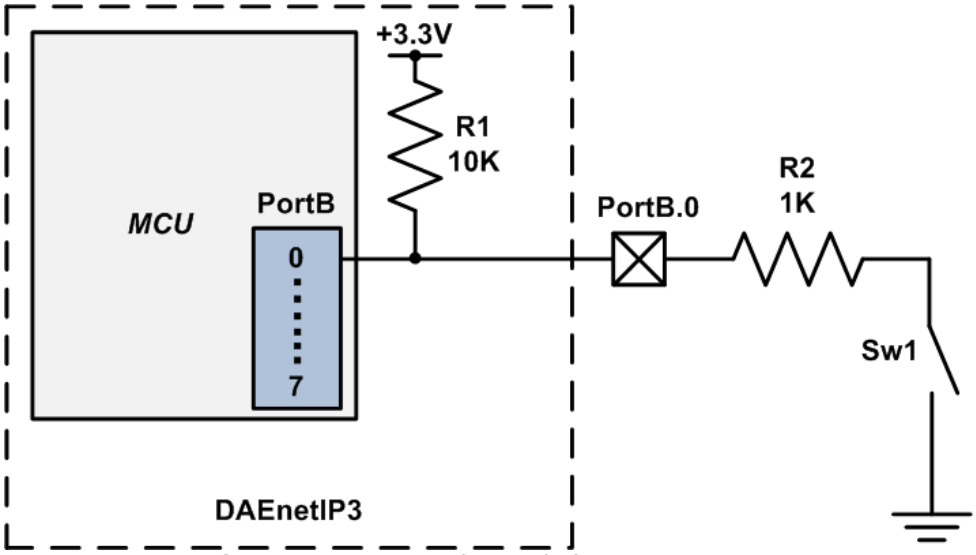

Figure 76. Connecting switch to PortB.0

22.3. Analog inputs (PortC)

DAEnetIP3 has 8 analog inputs port. This port is called Port C. Each output line has pull-down resistor 68K to GND (figure 77). The resolution of the used ADC is 10 bit. The reference voltage is 2.048VDC. The input voltage for each ADC channel is from 0 up to 2.048V – approx. 20mV/div. **Be careful, the inputs are connected directly to the MCU pins. Incorrect connections or over-voltage may damage the DAEnetIP3 controller! That's why it is recommend to use R1 resistor for protection.**

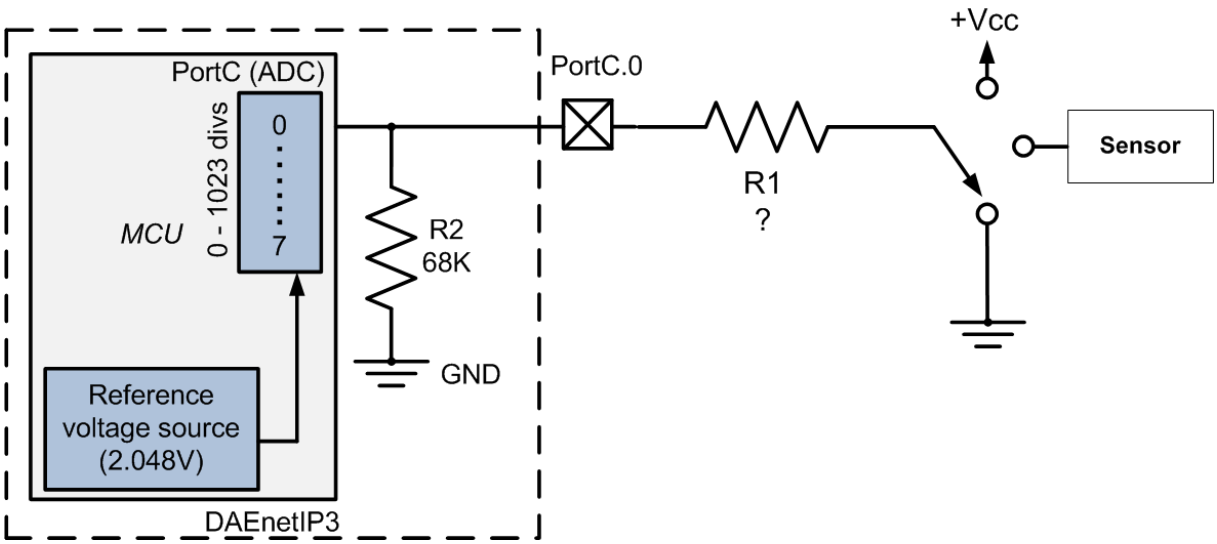

Figure 77. Using PortC analog inputs

R1 resistor must be chosen in a way so there must be no more than 1mA input current in case of short-cut or damaged sensor.

$$V_{max}/R1 < 1mA$$

22.4. Connecting LM335Z temperature sensor

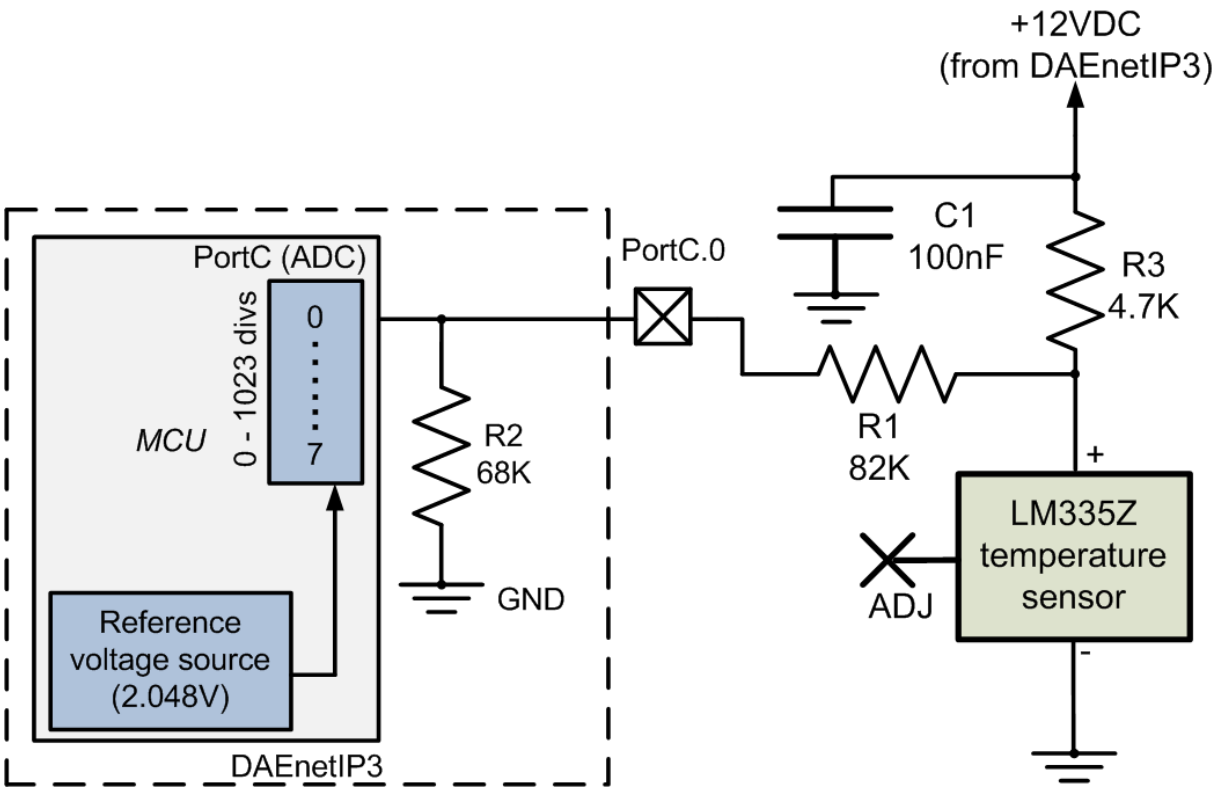

Figure 78. Connecting LM335Z to PortC.0

The measured temperature range is from -40°C up to +100°C
The documentation for the sensor can be downloaded from here

Settings for PortC.0 to show temperature in °C (linearization):

Min. value =	-273.00
Max. value =	178.00
Label =	C

22.5. Connecting LM35DZ temperature sensor

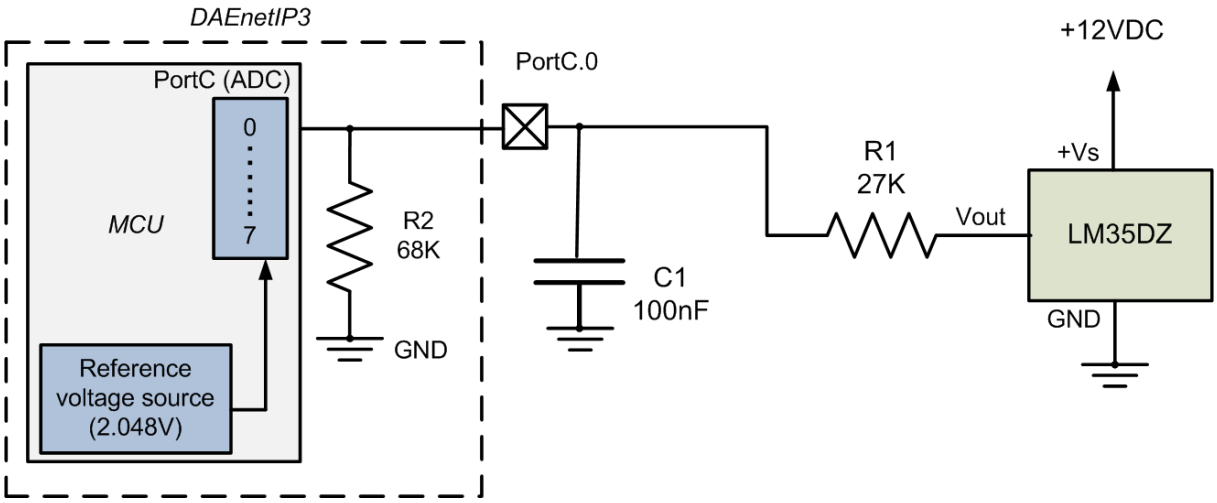

Figure 79. Connecting LM35DZ to PortC.0

The measured temperature range is from 0°C up to +100°C
The documentation for the sensor can be downloaded from here

Settings for PortC.0 to show temperature in °C (linearization):

Min. value =	0.00
Max. value =	286.11
Label =	C

22.6. Connecting MCP9700A temperature sensor

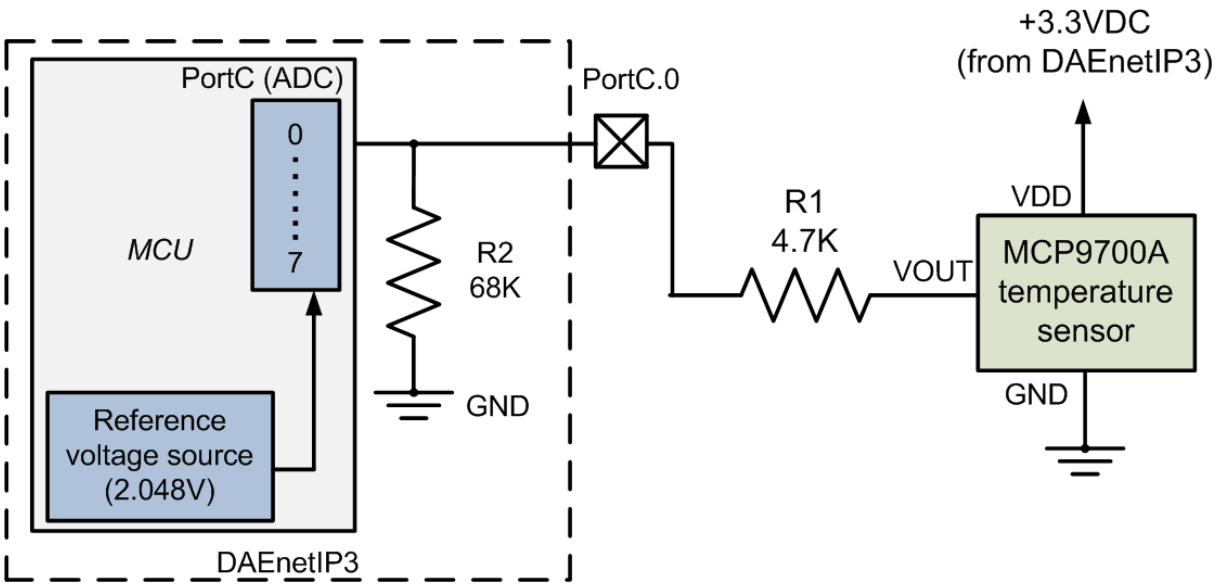

Figure 80. Connecting MCP9007A to PortC.0

The measured temperature range is from °C -40 up to +125°C
The documentation for the sensor can be downloaded from here

Settings for PortC.0 to show temperature in °C (linearization):

Min. value =	-50.00
Max. value =	168.95
Label =	C

22.7. Connecting HIH-4000 humidity sensor

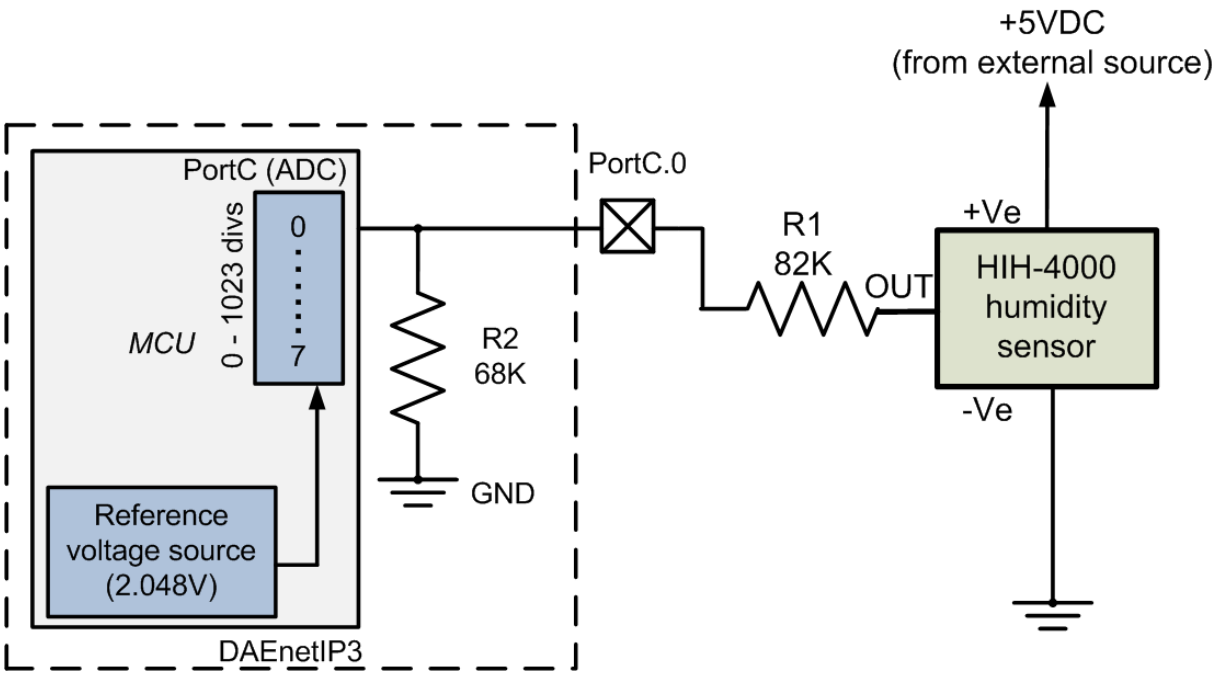

Figure 81. Connecting HIH-4000 to PortC.0

The measured relative humidity range is from 0% up to 100%
The documentation for the sensor can be downloaded from here

Calibration settings for PortC.0 to show relative humidity in %RH are (linearization):

Min. value =	-26.00
Max. value =	117.00
Label =	RH

22.8. Connecting SHARP GP2Y0A21YK0F distance sensor

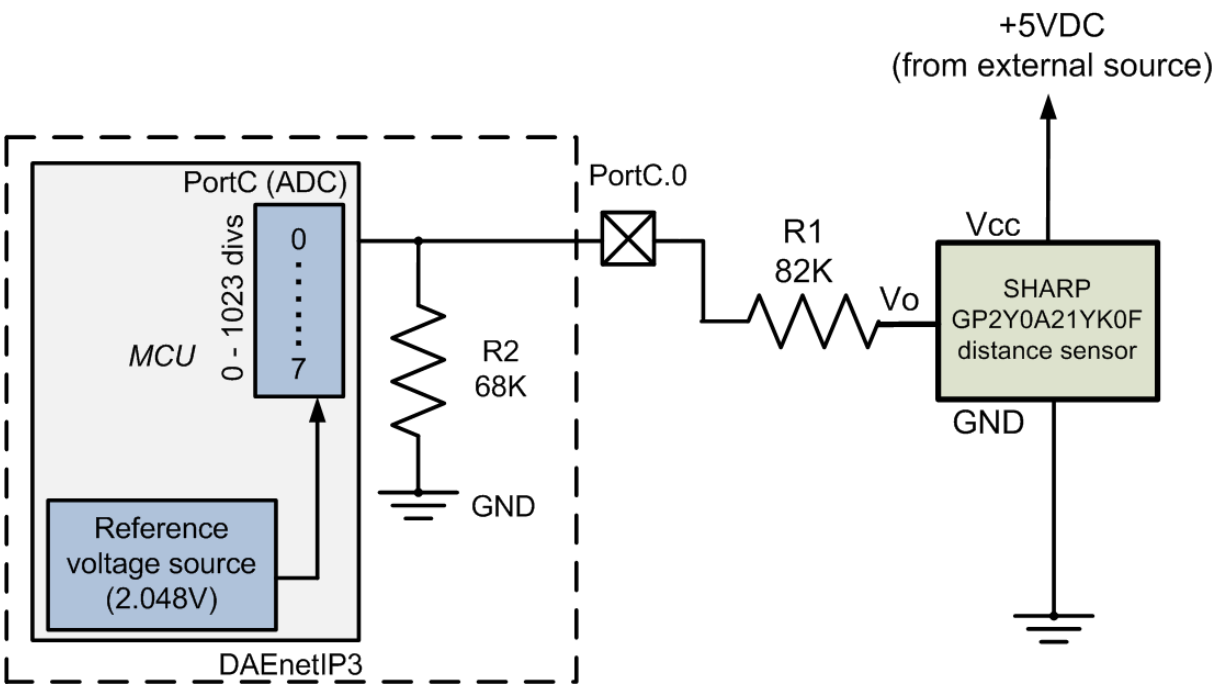

Figure 82. Connecting GP2Y0A21YK0F to PortC.0

The documentation for the sensor can be downloaded from here

The sensor is not linear and it is not possible to show ADC values directly in cm, but still DAEnetIP3 can be adjusted to show values in volts. Settings for PortC.0 to show sensor output in volts are (linearization):

Min. value =	0.00
Max. value =	4.55
Label =	V

23. Appendix 6. Reset the controller

23.1. Hardware (1)

1. Unplug the power supply carefully.
2. Wait 10 seconds.
3. Plug the power supply.

23.2. Hardware (2)

1. Connect Pin 1 and Pin 2 of system port. It is recommended connecting these pins with switch or button, avoiding the possibility of touching DAEnetIP3 tracks while working.
2. Disconnect the Pin 1 and Pin 2 of system port.

23.3. Reset via Web

Web browser -> System -> Reset

23.4. Reset via UART command

Send to UART port: AA**YRT=1**; Where the AA is the serial address, YRT=1 is the function code for default settings and “;” is the delimiter.

23.5. Reset via Telnet command

Send to UART port: **YRT=1**; Where YRT=1 is the function code for default settings and “;” is the delimiter.

23.6. Reset via DAEnetIP3 socket command

Send to UART port: AA**YRT=1**; Where the AA is the serial address, YRT=1 is the function code for default settings and “;” is the delimiter.

24. Appendix 7. Loading the default settings

24.1. Hardware loading default settings

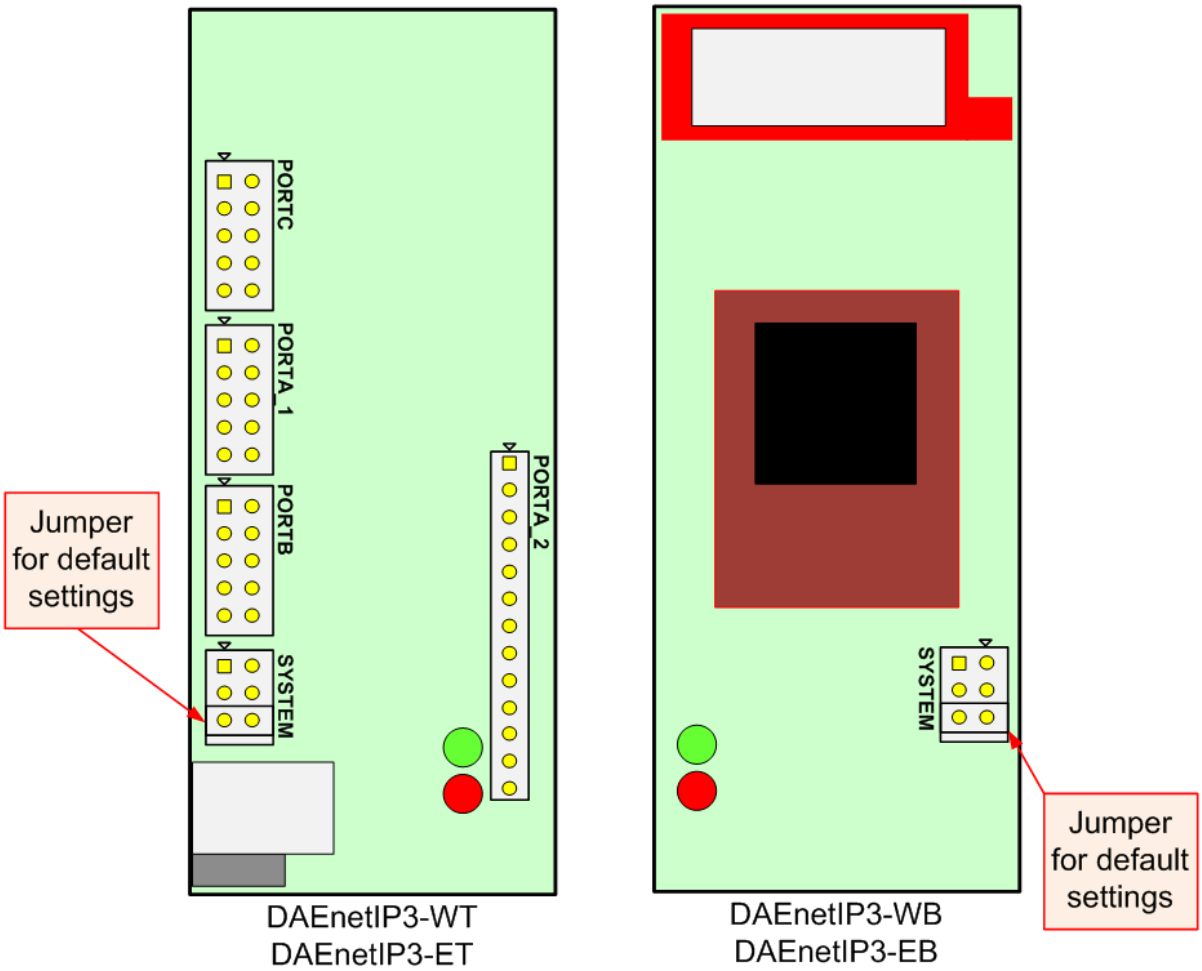

Figure 83. Jumper for default (factory) settings

1. Turn off the power supply of the IP controller
2. Remove the jumper for default settings
3. Turn on the power supply of the IP controller
4. Wait 20 seconds
5. Turn off the power supply
6. Put the jumper again on the position shown on the figure above
7. Turn on the power supply

24.2. Web loading default settings

Web browser -> System -> Load default settings.

24.3. Loading default settings via UART command

Send to UART port: AA**YDF=1**; Where the AA is the serial address, YDF=1 is the function code for default settings and ";" is the delimiter.

24.4. Loading default settings via Telnet command

Send to UART port: **YDF=1**; Where YDF=1 is the function code for default settings and ";" is the delimiter.

24.5. Loading default settings via DAEnetIP3 socket command

Send to UART port: AA**YDF=1**; Where the AA is the serial address, YDF=1 is the function code for default settings and ";" is the delimiter.

25. Appendix 8. Firmware upgrade

Please note that TFTP firmware upgrade is not anymore supported. From our experience we don't recommend to use it because it is unsafe and this can damage your DAEnetIP3 controller.

If you would like to upgrade your DAEnetIP3 device with the last firmware version, please contact with us and we will send you instructions.

26. Appendix 9. How to create Virtual Serial Port for DAEnetIP3

1. Download and install Device Server Toolkit
   - 32 bit Windows download
   - 64 bit Windows download
2. When you start the application you will have to create your Virtual Serial Port that will be used in your project. So when you start the software you should see the window bellow. Click Add button:

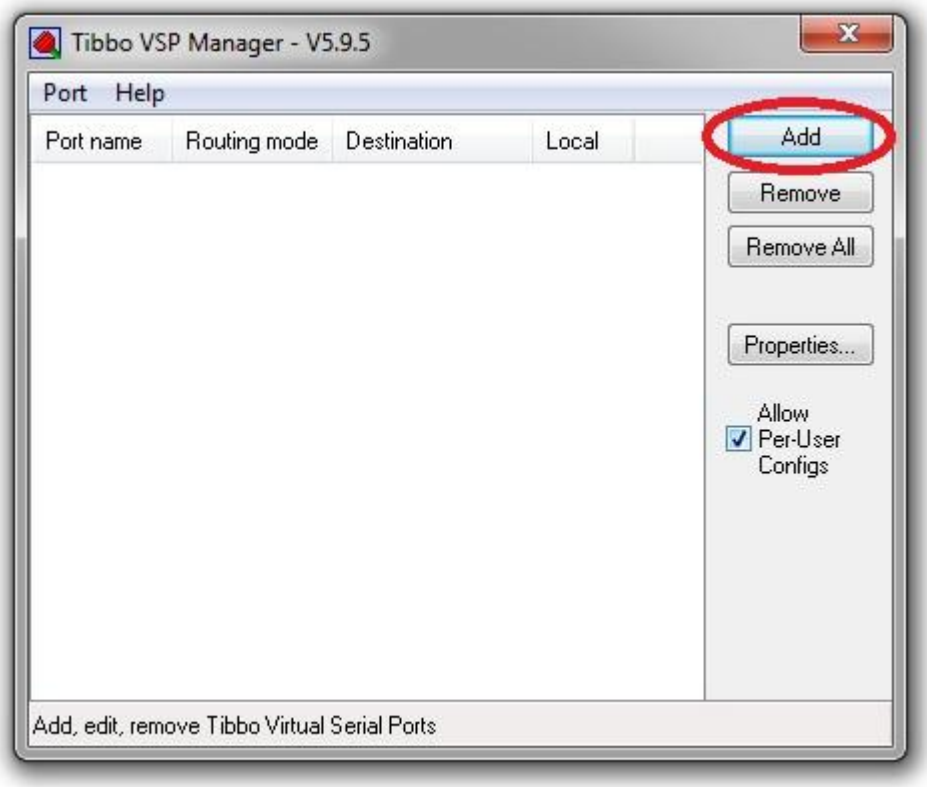

Figure 84. VSP Manager

3. After that you will have to adjust the VSP settings. The VSP name is **COM1.** IP address is your DAEnetIP3 device IP address (in this case it is the default **192.168.0.100**). We chose port to be **1010** but may be any free of your network.

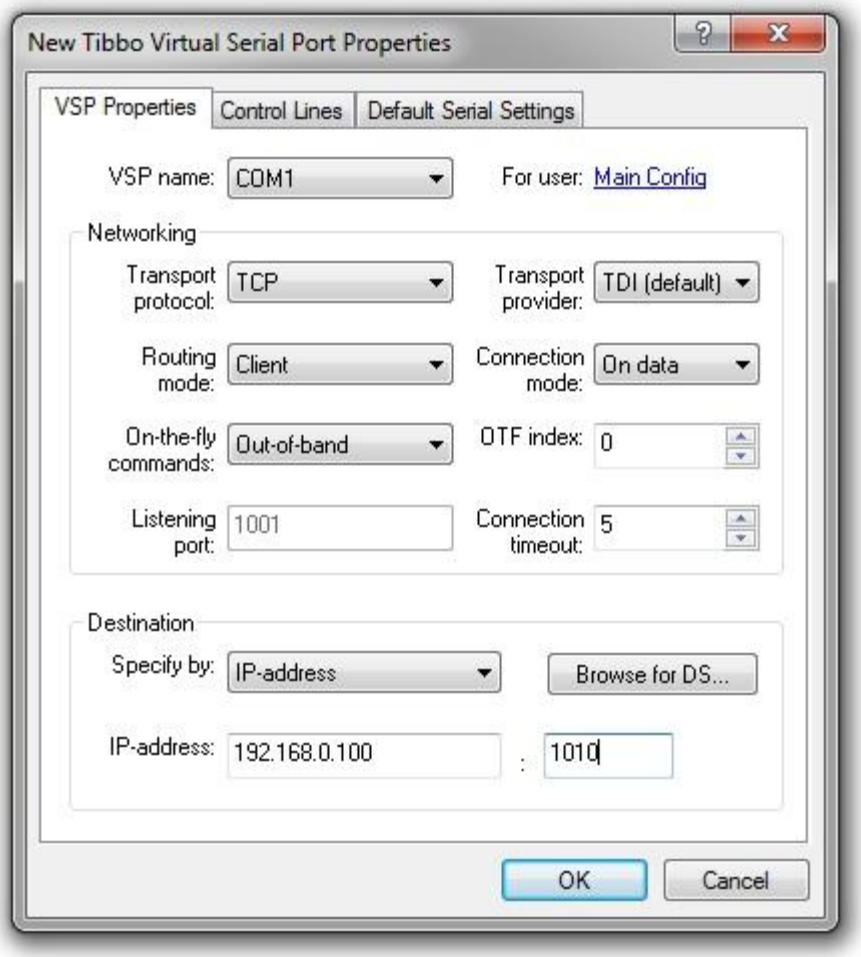

Figure 85. Properties

4. When you are sure for all settings just create the VSP.

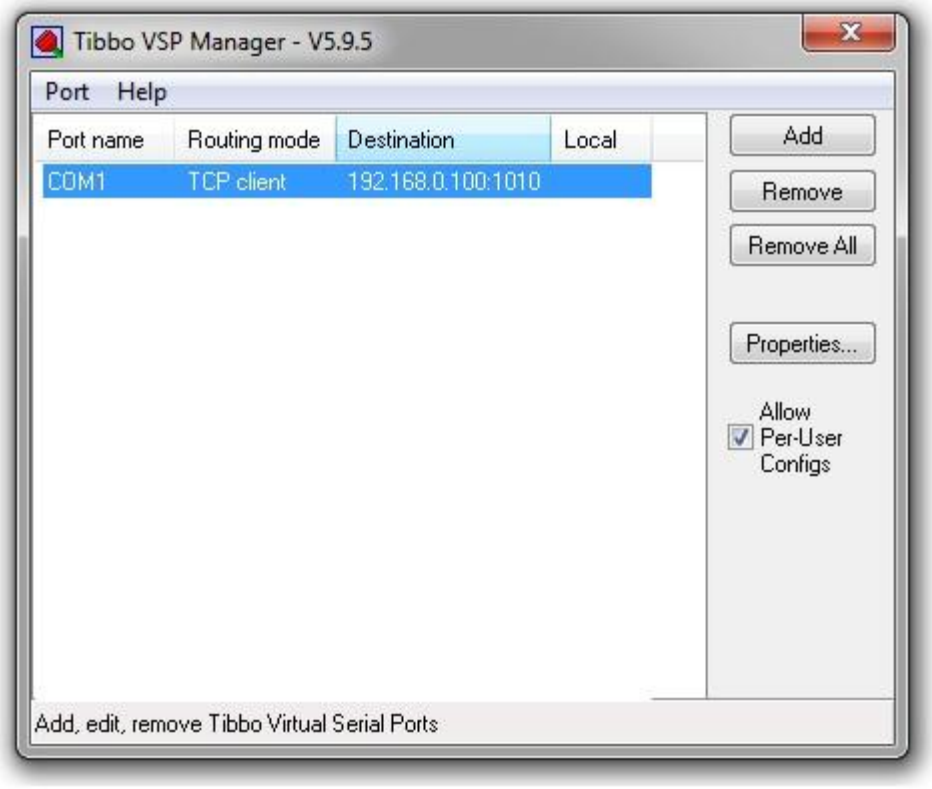

Figure 86. VSP created

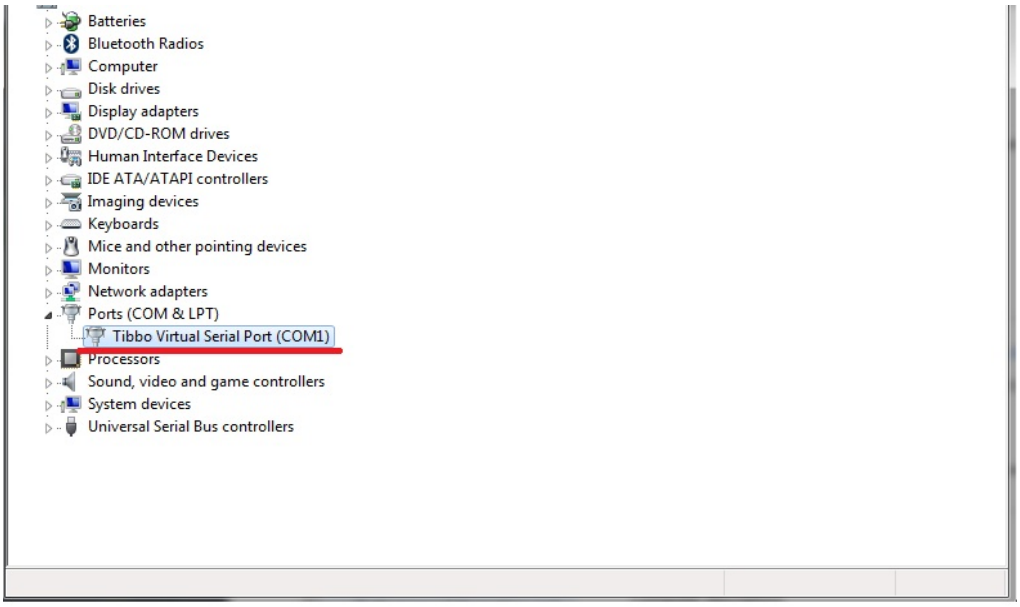

5. The Virtual Serial Port now is created. You may see it in the Device Manager.

Figure 87. Device Manager

27. Appendix 10. Example commands

27.1. Commands for Digital Outputs (Port A)

Example commands for TCP/IP (VSP). RC4 encryption is off. Serial address of the device is 00:

Set PortA.0 OFF
Send: 00AS0=0;
Receive: 00AS0=0;

Set PortA.0 ON
Send: 00AS0=1;
Receive: 00AS0=1;

Set PortA.11 OFF
Send: 00ASB=0;
Receive: 00AS0=0;

Set PortA.11 ON
Send: 00ASB=1;
Receive: 00AS0=1;

Set all output pins (whole PortA) ON. Actually all the DO are in high level.
Send: 00ASG=FFFF;
Receive: 00AS0=0;

Set all output pins (whole PortA) OFF. Actually all the DO are in low level.
Send: 00ASG=0000;
Receive: 00AS0=0000;

Get PortA.0 state. The answer is that the output is in low level.
Send: 00AS0=?;
Receive: 00AS0=0;

Get all the outputs state (whole PortA). The answer is that the PortA.0 - PortA.7 are ON and PortA.8 - PortA.15 are OFF.
Send: 00ASG=?;
Receive: 00ASG=00FF;

Example commands for Telnet:

Get all the outputs states. The answer is that the PortA.0 - PortA.7 are ON and PortA.8 - PortA.15 are OFF.
Send: ASG=?;
Receive: ASG=00FF;

Example commands for UART. Serial address of the device is 00:

Get all the outputs states. CRC16 is OFF. The answer is that the PortA.0 - PortA.7 are ON and PortA.8 - PortA.15 are OFF.
Send: 00ASG=?;
Receive: 00ASG=00FF;

Get all the relais states. CRC16 is ON. The answer is that the PortA.0 - PortA.7 are ON and PortA.8 - PortA.15 are OFF.
Send: 00ASG=?2DE3;
Receive: 00ASG=00FF2F5C;

Example commands for HTTP API:
Set PortA.0 OFF
Send: AS0=0;
Receive: <!DOCTYPE html><html><body>AS0=0;</body></html>

Set PortA.0 ON
Send: AS0=1;
Receive: <!DOCTYPE html><html><body>AS0=1;</body></html>

27.2. Commands for Digital Inputs (Port B)

Example commands for TCP/IP (VSP). RC4 encryption is off. Serial address of the device is 00

Get PortB.0 state. The input level is low.
Send: 00BV0=?;
Receive: 00BV0=0;

Get PortB.7 state. The input level is high.
Send: 00BV7=?;
Receive: 00BV7=1;

Get the whole PortB. PortB.0 - PortB.3 is low and PortB.4 - PortB.7 is high.
Send: 00BVG=?;
Receive: 00BVG=F0;

Example commands for Telnet:

Get the whole PortB. PortB.0 - PortB.3 is low and PortB.4 - PortB.7 is high.
Send: BVG=?;
Receive: BVG=F0;

Example commands for UART. Serial address of the device is 00

Get the whole PortB. PortB.0 - PortB.3 is low and PortB.4 - PortB.7 is high.
Send: 00BVG=?;
Receive: 00BVG=F0;

Get the whole PortB. CRC16 is ON. PortB.0 - PortB.3 is low and PortB.4 - PortB.7 is high.
Send: 00BVG=?E1A7;
Receive:00BVG=F039F0;

Example commands for HTTP API:

Get the whole PortB. PortB.0 - PortB.3 is low and PortB.4 - PortB.7 is high.
Send: BVG=?;
Receive: <!DOCTYPE html><html><body>BVG=0F;</body></html>

Get PortB.7 state. The input level is high.
Send: BV7=?;
Receive: <!DOCTYPE html><html><body>BV7=1;</body></html>

27.3. Commands for Analog Inputs (Port C)

Example commands for TCP/IP (VSP). RC4 encryption is turned off. Serial address of the device is 00:

Get PortC.0 state. The input level is 512 (From 1023 max).
Send: 00CV0=?;
Receive: 00CV0=512;

Get PortC.7 state. The input level is 1002 (From 1023 max).
Send: 00CV7=?;
Receive: 00CV7=1002;

Example commands for Telnet:

Get PortC.0 state. The input level is 512 (From 1023 max).
Send: CV0=?;
Receive: CV0=512;

Example commands for UART. Serial address of the device is 00:

Get PortC.0 state. The input level is 512 (From 1023 max). CRC16 is OFF.
Send: 00CV0=?;
Receive: 00CV0=512;

Get PortC.0 state. The input level is 512 (From 1023 max). CRC16 is ON.
Send: 00CV0=?3B2A;
Receive:00CV0=512F4EA;

Example commands for HTTP API:

Get PortC.0 state. The input level is 512 (From 1023 max).
Send: CV0=?;
Receive: <!DOCTYPE html><html><body>CV0=512;</body></html>

Get PortC.7 state. The input level is 1002 (From 1023 max).
Send: CV7=?;
Receive: <!DOCTYPE html><html><body>CV7=1002;</body></html>

28. Appendix 11. Mechanical draw

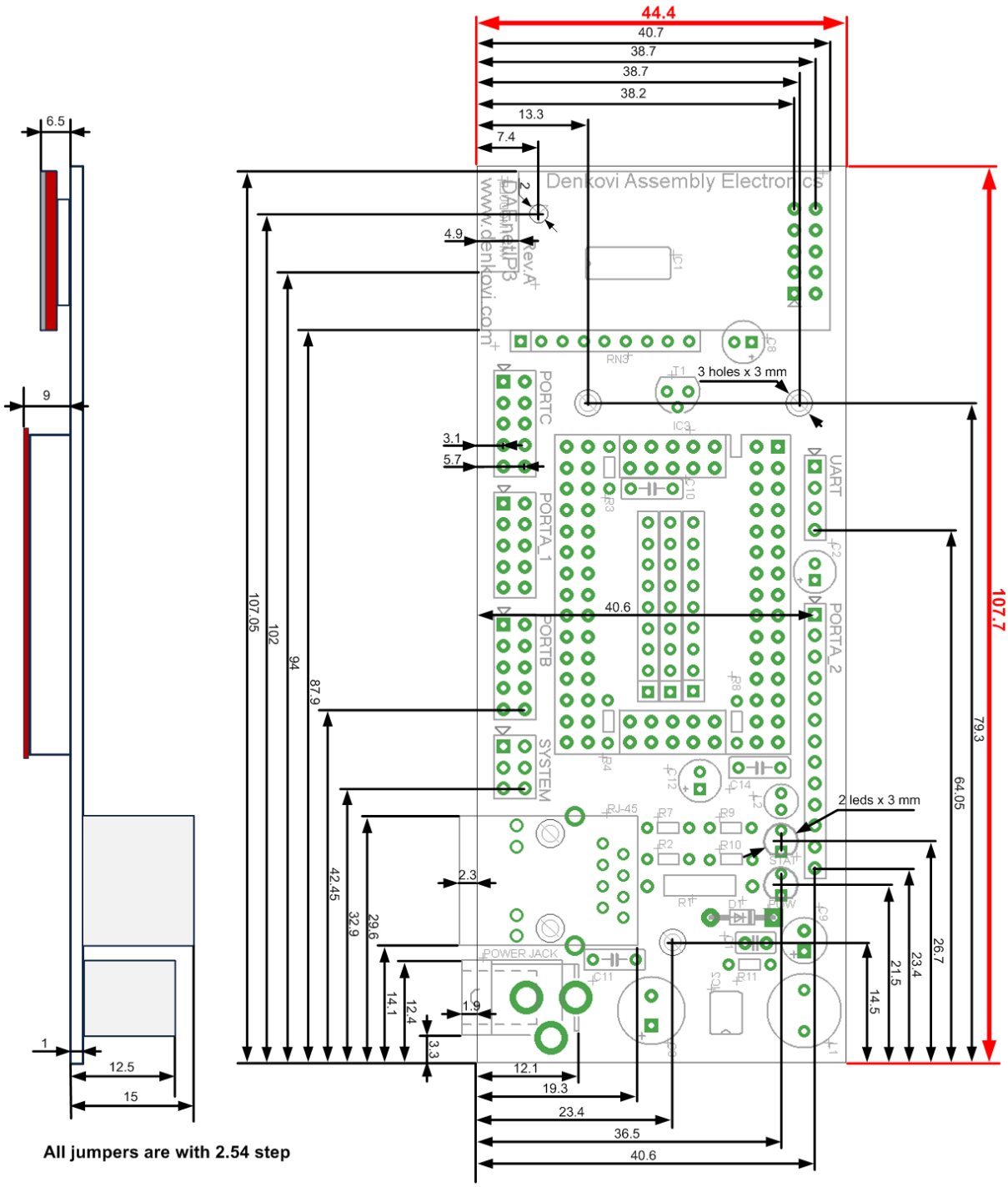

Figure 88. DAEnetIP3 PCB dimensions

29. Appendix 12. Ordering codes

29.1. DAEnetIP3 – ET

This is DAEnetIP3 controller without Wi-Fi interface. The UART port, SYSTEM Port and leds are soldered on the top side (Figure 89).

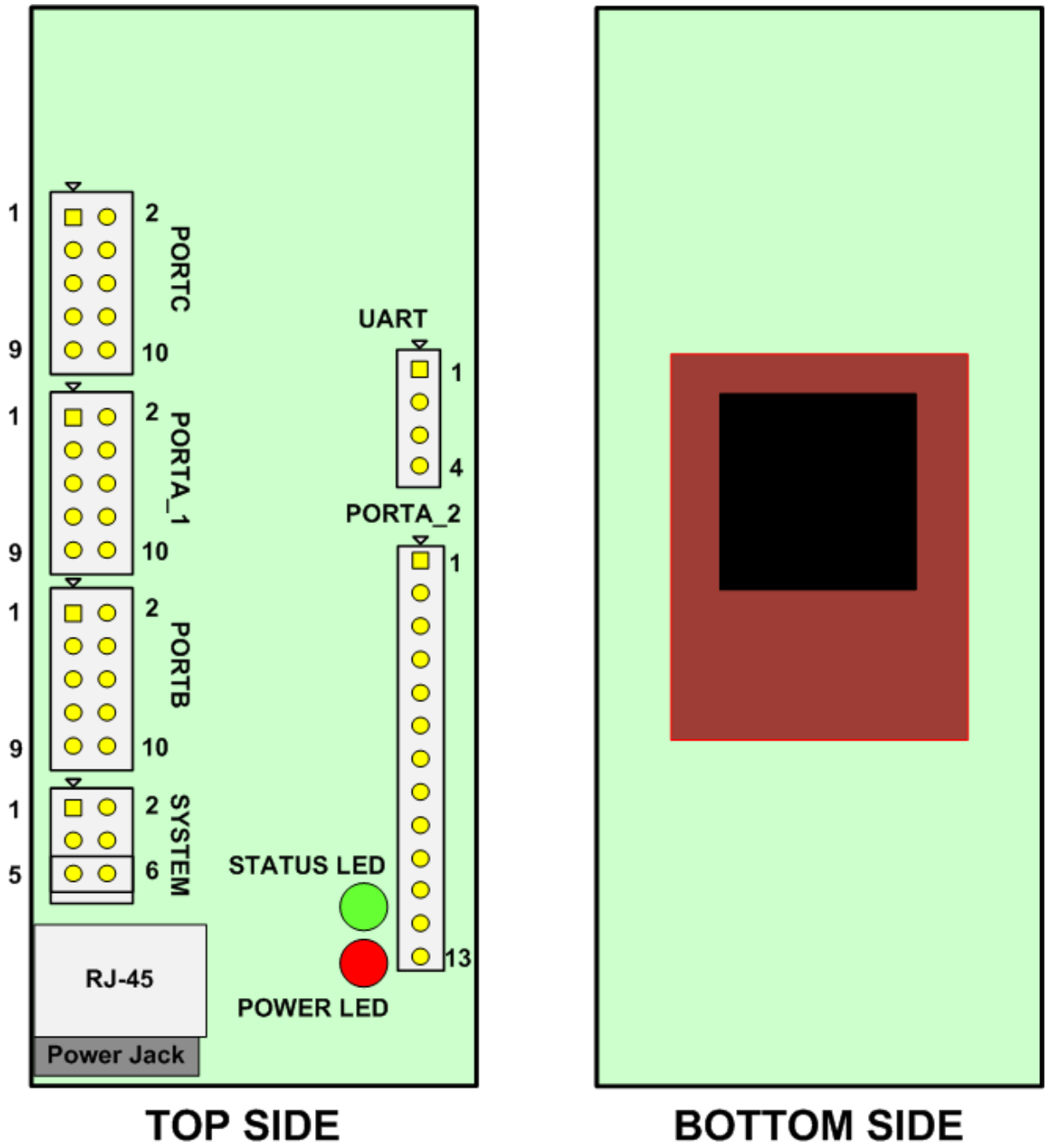

Figure 89. DAEnetIP3 – ET

29.2. DAEnetIP3 – WT

This is DAEnetIP3 controller with Wi-Fi interface. The UART port, SYSTEM Port and leds are soldered on the top side (Figure 90).

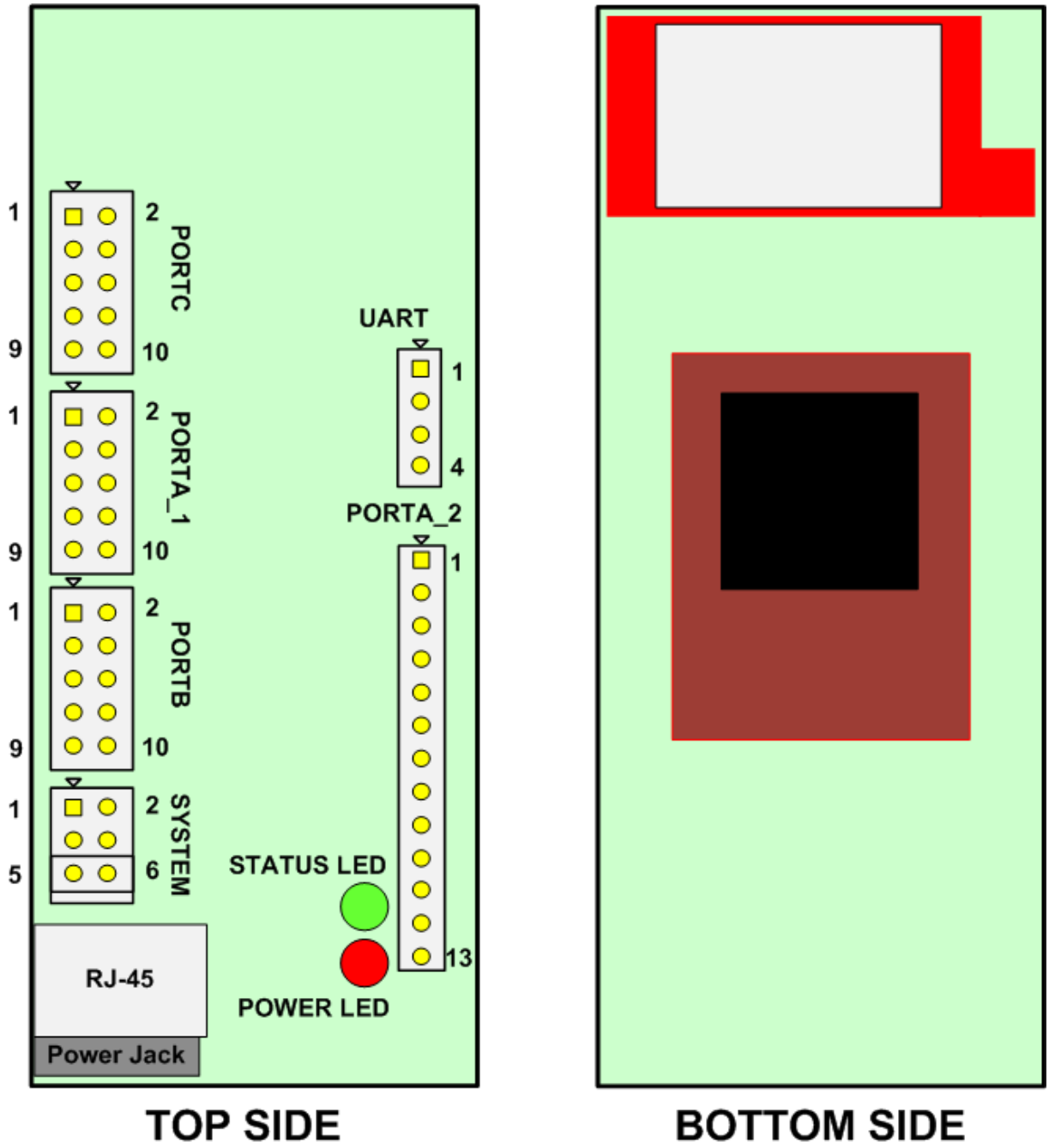

Figure 90. DAEnetIP3 - WT

29.3. DAEnetIP3 – EB

This is DAEnetIP3 controller without Wi-Fi interface. The UART port, SYSTEM Port and leds are soldered on the bottom side (Figure 91).

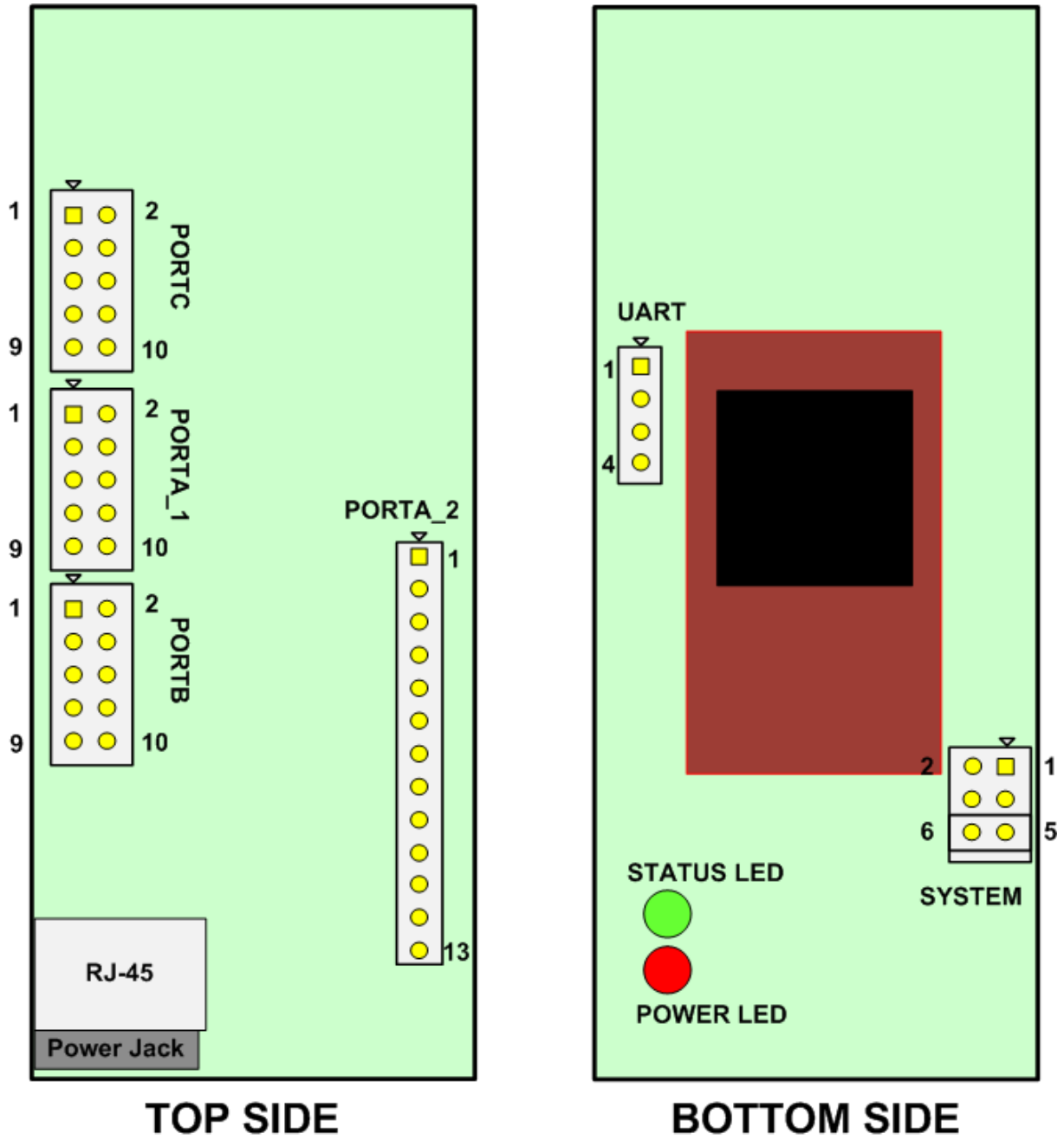

Figure 91. DAEnetIP3 – EB

29.4. DAEnetIP3 – WB

This is DAEnetIP3 controller with Wi-Fi interface. The UART port, SYSTEM Port and leds are soldered on the bottom side (Figure 92).

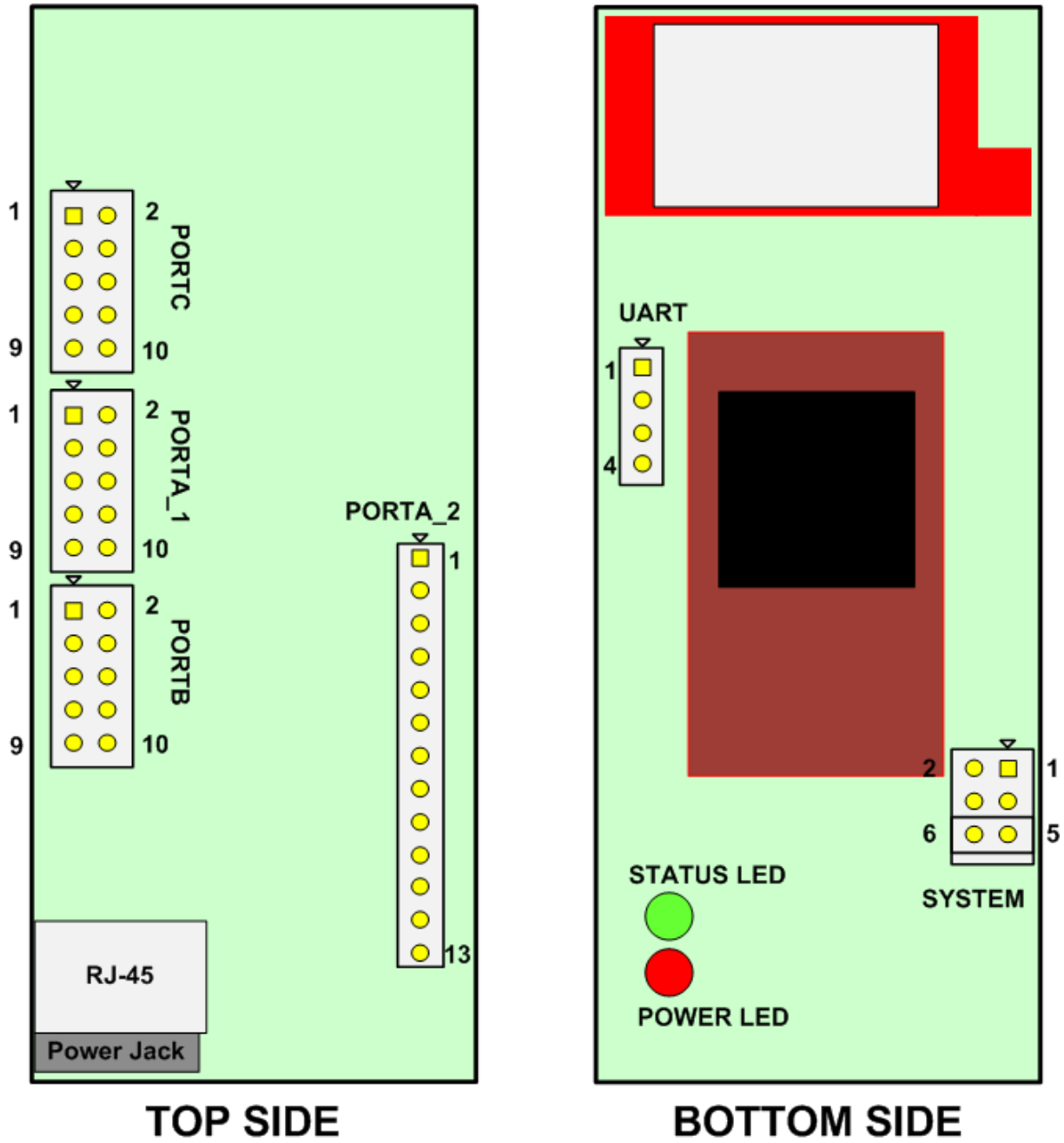

Figure 92. DAEnetIP3 – WB